Australian Croquet Association Inc.

Golf Croquet Referees Manual

2008

Index - ACA Golf Croquet Referees Manual

Section GC: A – General

1 Definitions
2 ACA Referees Manual Overview
3 Operational Techniques

Section GC: B – Technical

1 Mechanicals (Hoop Gauges & Referees Equipment)
2 Ball on Border – In or Out? (Outside Agency or Not?)
3 How to Mark a Ball
4 Testing if a Hoop Has Been Made
5 Hoop Setting and Hoop Checking
6 The Carbon Paper Test – for Double Taps
7 Bevel Stroke Fault – Hampered Stroke
8 The Halfway Rule (Offside) – *Rule 10*
9 The "Double Tap" – Multiple Contacts by Ball and Mallet
10 Hoop running – Double Tap
11 Hoop running – Push
12 The Crush and Double Tap in or Close to a Hoop
13(a) Basic courtesy – Golf Croquet Notes for referees
13(b) Basic courtesy – Golf Croquet Notes for players
14 Damage – Court Damage
15 Duration of Games (Time)
16 Replacement of a Ball after Interference (*Rule 9(f)*)

Section C – Administration

1 Job descriptions:
- National Director of Refereeing (NDR)
- State Director of Refereeing (SDR) Job Description *(Model Only)*
- State Referees Committee *(Model Only)*

2 GC Referees – How Appointed & Duties (ACA System)
3 The Role of the Tournament Referee
4 Tournament Referee's Opening Address (Version: 11)

Section D – Training

1 Notes and a System for a Refresher Day
2 Problem-Solving Basics
3 Referees' Training – Some Specifications

Section E – Ethics, etc.

1 Decisions
2 Code of Ethics – Referees
3 Etiquette – Referees

7 January, 2008

Definitions

Definitions of commonly used abbreviations referred to in following sections of this manual.

AC	Association Croquet
ACA	Australian Croquet Association Inc.
GC	Golf Croquet
NDR	National Director of Refereeing
RiC	Referee in Charge
RoA	Referee on Appeal
RoC	Referee on Call
RoR	Referee on Request
Rules	WCF Golf Croquet Rules
SDR	State Director of Refereeing
SpR	Spectator Referee
SuR	Supervising Referee
TM	Tournament Manager
TR	Tournament Referee
WCF	World Croquet Federation

ACA Referees Manual Overview

This publication is the ACA Policy on Golf Croquet (GC) refereeing which is to be followed by all GC referees.

New pages, reflecting ACA policy changes – ACA WCF GC Rules Committee rulings affecting refereeing, or new refereeing practices as approved by the NDR will be issued as required on dated replacement pages.

State Directors of Refereeing are responsible for the implementation of the ACA GC Refereeing System in their state and for ensuring that officials have copies of this manual as required – the price of which and method of distribution will be decided in each state, the proceeds of which remain in the state.

Maree Skinner
Hon. Secretary and Executive Director
ACA

Operational Techniques

This manual is provided for the guidance of Golf Croquet referees in carrying out their duties as officials of a Golf Croquet tournament, pennant or shield events (a manual covering Association Croquet refereeing has been issued and is available from SDR's or State Secretaries).
Officials conducting workshops and accreditation courses are encouraged to make this document available to participants.

General

Each page is dated and authorised by the issuing authority.

Changes to the operating instructions can be made by referees making written recommendation to their SDR, who will forward them to the NDR, who will then circulate it to all other SDR's – if a majority of SDR's agree it will be submitted to the ACA Executive.

A new page will be issued showing date issued, the date of the superseded page, a brief reason for reissue, and who accepts responsibility for issuing.

All pages will be published and issued by the NDR subject to ACA Executive approval.

Persons who are authorised to submit pages for issue or reissue via the NDR, in this Manual at other times are:

NDR for changes in Refereeing procedure and techniques
ACA Secretary for policy issues or Regulations interpretations
ACA WCF GC Rules Committee representative for GC Rules changes or Rules interpretations.

Changes to the Rules can only be made via the ACA WCF Golf Croquet Rules representative.

Suggestions can be forwarded directly to the representative or via a State Rules Committee (if there is one), a SDR or a State Director of Golf Croquet.

The index will be altered appropriately.

An example of how the new page information would appear at the end of the document:

Date: April 1, 2008 (Issued by:ACA Secretary) - Supersedes: March 21, 2003
Reason: New policy to conform with handbook

Mechanicals (Hoop Gauges & Referees Equipment)

Hoop Gauge: This tool, while not mentioned in the WCF Golf Croquet Rules, is the ACA accepted device to be used for measuring the inside width of hoops . Every Tournament Notice (*ACA Regulation 23*) must specify what the inside measurement for hoops is to be for that event.

Usually 3 ¾ +/- 1/32 inch is acceptable for club play (i.e. between 3 23/32" and 3 25/32").
For most tournaments the hoops are to be set at the specification shown in *Rule 3(a).*
For championship play they ought to be set at 3 11/16" with an allowable variation of up to +1/32".
However, the Rule allows some latitude and international events might choose to use *"Ball + 1/32 inch"*. This is a management policy decision set by the Tournament Committee for that specific event. It is essential that every referee and TR checks the specification on the Tournament Notice (Tournament Conditions).

The Tru-Gauge™ with a rigid plastic with an arc graduated from 3 22/32" to 3 26/32" is the official ACA gauge. Generally the standard for ACA events is that the width be set on the '11' mark (3 11/16") [3 22/32"] The upper variation is the **mark** between the '11' and the '12'. This mark is (3 23/32").which is 3 11/16 + 1/32 inches.

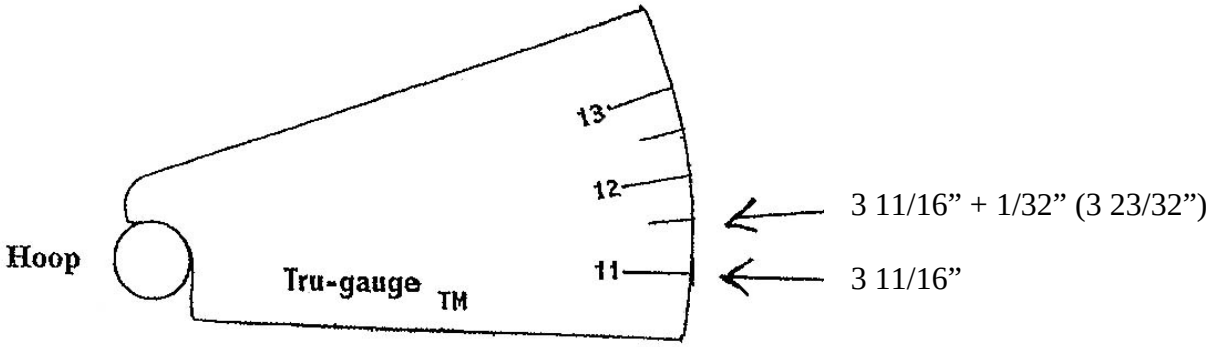

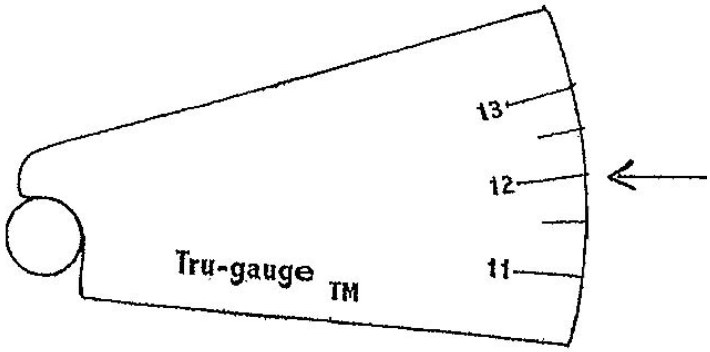

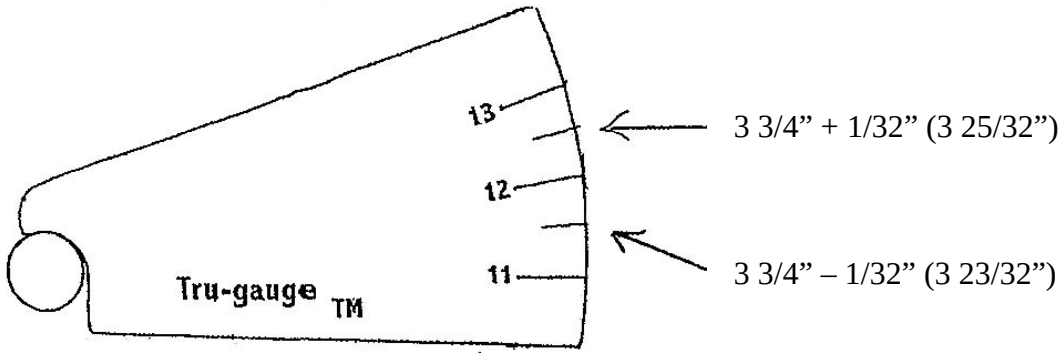

Older and other gauges:

Brass ACA Gauge – This the (old)"official" ACA brass "Go - No Go" gauge. This gauge and method may be used to reach a 3 ¾” plus or minus 1/32” setting and conforms to the ACA Regulation relative to hoops to be set at a nominal 3 ¾”.

The ACA policy, if the 3 ¾” setting is used, is that the narrower “go” section of the brass ACA "Go-NoGo" gauge which measures 3 23/32" (3 ¾” minus 1/32”) is to pass through the hoop, at half-ball height, with little or minimal movement. In other words "set tightly to the minimum".

The "No Go" Section (3 25/32") must never go through the hoop legs.

Feeler gauges – strips of 1/16” and 1/32” thick metal or plastic. Hoops are measured at the size of the maximum ball width plus 1/16” or at some other width with no tolerance. This technique is acceptable at major tournaments. Details are to be included and specified in the tournament notice (*ACA Reg 23*).

Brass 3 3/4 gauge (one measurement only). This gauge does not measure the required tolerances or variations and is **not** approved.

Aluminum Gauge – ACA or State – 3 ¾” (of one measurement only) is **not** approved. Aluminium wears and bends easily.

Referee Equipment

What a Referee ought to carry on their person:
Strongly recommended: A waist bag (belt bag) to carry: a minimum of 6 markers
Optional: A length of cotton or thread
The rigid plastic Tru-Gauge™ (please do not carry a metal hoop gauge as it could cause injury if you fall over)

What to carry in your Referee Satchel:
- WCF GC Rules Book with the interleaved commentary
- Reel of cotton or similar
- Notebook and pen/pencil
- A container of markers [a 35 mm film container is excellent for this purpose]
- A coin for tossing [optional]
- A large screwdriver [for minor resetting of hoops quickly during a game - optional]

What the venue ought to provide for a Referee:
- A chair and a shady and/or sheltered position.
- Electronic timer for each game. Note: most games are untimed and referees are probably not required to be the time keeper or to be in a position to undertake this function if nor acting as RiC.
  The RoR (RoC) function requires constant movement between courts which makes time-keeping difficult.
- Rubber hammer, spirit level, large screwdriver, score sheet.

Ball on Border – In or Out? (Outside Agency or Not?)

Determining if a ball is actually in or out is rarely necessary but in certain circumstances it is vital. The Rules specify that a ball leaves the court when more than half of it crosses the boundary. If it is 'out' it becomes an "**outside agency**" and subject to the provisions that apply.

Example: a critical situation could occur at Hoop 13 (when the scores are '6 all') when a player has deliberately struck a ball to go 'out' behind Hoop 13, but it only just reaches the boundary and needs to be judged 'in' or 'out'.
If it is judged to be 'out', when it is replaced on the boundary, it cannot be hit away by the opponent because it is an "outside agency". If it is 'in' it can be hit away.

There are numerous types of boundaries such as semi permanent (chalk or dye-lines) or temporary borders (such as string or cord) or permanent borders (metal strips).

String Lines

The ball will obviously be in or out as it is impossible for a ball to sit dead centre.

Chalk Lines

Semi-permanent lines of liquid chalk or liquid dye. 'Short-life' lines such as these, while they have the problem of overlapping, are at least quite safe.
The **inside** of the newest, hopefully most inward line is to be used.
If the lines are ambiguous, under certain rare circumstances, the referee ought to walk the players (or team captain) around the lines and obtain agreement as to what constitutes the line for the match.

When a ball is on or close to the border, the first test must be a visual sighting from above, firstly by standing inside, then outside the line. Determining if the centre of the ball is in or out is difficult, but a decision may be necessary.

How to Mark a Ball

In a Critical Position

Ball marking is to be done in a way not **to distract the striker when playing a stroke.**

1. The standard technique is to use two golf markers and "cross triangulate" using the hoop legs, see illustration 1.1. Markers are to be least one yard one from the ball.

2. In addition to method 1 it is recommended that two other markers be used to form a line bisecting the ball.

3. In addition to method 2, it may on occasions be useful to check the accuracy of the method 2 markings by placing two “check markers” behind the hoop to assist in assuring the accuracy of the . technique. These markers may be removed, as in method 4, if necessary, after checking is complete.

NOTE: Some care must be taken not to place markers where they might inconvenience the player.

4. Alternatively the markers shown below may be used instead, if method 1 causes striker distraction.

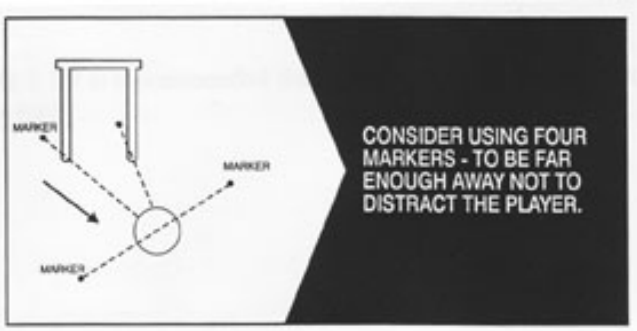

NEAR A HOOP – Critical position during a <u>hampered</u> stroke <u>hitting away</u> from the hoop.

In a Non-Critical Position

If a ball from the other game is not in a critical position, the permission of the players of the other (double banked) game is to be obtained so that it may be temporarily removed provided that its position has been marked.
This applies to both players and officials who wish to remove balls. It is important to bear in mind that a "critical position" not only applies to a ball in or near a hoop, but also to a ball in the open court. Officials should be expedient in marking non-critical balls to avoid wasting time. A single marker is usually quite sufficient.

Marking the Target Ball

When a striker is making a *hampered* stroke attempt to strike a ball to hit a target ball, both balls must be marked. Reason: if a fault is committed both balls may be required to be replaced [at the requirement of the opponent] - *Rule 13(b)(1)*.
If it is to be a hard stroke, on a damp court, serious consideration needs to be given as to how to mark the target ball. Commonly, the technique is to mark this ball underneath the outside equator of the ball [in the Golf style] (more or less directly away from the striker, but in line with a specific object e.g. centre peg) so the striker cannot see and be distracted by it, however this has proven to be not always satisfactory.

Experiments have shown that on a damp court, a hard stroke often causes the hit ball (target ball) to skid and cause up to 15 mm of court damage. When the target ball is hit by the striker ball, the target ball will skid, this is sufficient for the ball to dislodge the marker and in some cases, consistent with force, cause the hit ball to jump and travel far less than expected.
Under these circumstances cross triangulation using two or four markers ought to be used.
This may seem at first reading to be overkill, but this ball jumping phenomena has caused consternation at two international events.

Marking a ball after a fault

Example: a hampered stroke fault is committed during which both the striker and target ball are moved.
The previous positions of both balls will be known because the referee has marked them. The opponent is now entitled to require them to be “rectified” or “remain”. Also the opponent could request the balls be marked at the position they currently occupy after the fault, so that the balls can be replaced and a judgement made in the “rectified” position. The balls may then be returned to the “remain” position if required. This right is not specified in the Rules but it is sometimes done in the UK.
The repositioning of the balls may be repeated subject to commonsense and expedition in play.
The application of this option is unusual and is not to be encouraged, as it is not justified except in extremely rare cases.

Testing if a Hoop Has Been Made

Visual Test

Always conduct a visual test first, as promptly as possible. A visual test conducted from the **side** of the hoop is sufficient to make a decision. It is preferable for the test to be done with the eyes at half ball height. The visual test is to determine if the ball has passed the plane of the "playing side". Do not conduct from above, as the top [or crown] of the hoop is usually wider than the legs.

Mechanical Test

If further evidence is needed, use a piece of fine string, cotton, fishing line etc., stretched between the legs to assist in determining the plane. Conduct this test raising the cotton from below the ball as both the ball and the cotton can be seen clearly. The ball need not be touched once the cotton can be seen or not seen below the ball. Take care not to use undue horizontal force as this could distort the accuracy of the test if the hoop has become loose, rather than set firmly in the court. If the back of the hoop gauge is to be used for this purpose, also take care not to use undue horizontal force.

The ACA policy is that a visual test is required and a decision reached before string or gauge or other physical straight edges are employed to assist in confirming the visual decision. The decision is therefore made by the following test methods:

a) visual test alone, or
b) visual as well as mechanical test for confirmation

The back of a hoop brass gauge is commonly used but is not necessarily straight as it wasn't specifically designed for that purpose.

Safety Warning: The ACA discourages the practice of carrying metal or other gauges (as well as pens, pencils etc.) in pockets as they could prove dangerous if the referee slips or falls in the performance of their duties.

Hoop Setting and Hoop Checking

1 **Setting:** The setting of hoops is the responsibility of the TM who, (presumably in consultation with the groundsman) will use a mutually agreed technique and hole packing material (grass clippings, sand, earth, cardboard, tree bark, sphagnum moss, etc) using clamps and gauges as appropriate, see *Section GC B1 "Mechanicals"* regarding gauges.

2 **Checking:** However, immediately before and during a game it is the responsibility of the TR to check the width and firmness of the hoops. The TR will usually delegate this to the assigned referees.
Who is responsible for actually adjusting the hoops during a game ought to be determined by the Tournament Committee.

3 **Width adjustment.** If the referees are to perform this task, it is suggested in the interests of expediency, that extensive time consuming techniques not be used. Experience has shown that a large screwdriver (e.g. 300 mm long), a rubber hammer and gauge are sufficient.

4 **Decrease the hoop width**: use the screwdriver to shave a little earth from the inside of the hole and transfer it to the outside. **Increase the hoop width** by shaving some earth from the outside of one hole. This is a fast and effective method of altering the width of the hoop.

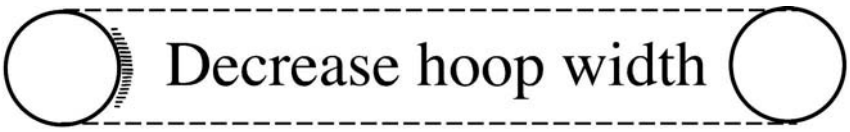

5 **Firm or tighten** (to make the hoop firm in the ground) insert the screwdriver and loosen the earth a little on the leading and trailing sides of the hole, that is, in both the playing and non-playing directions, re-insert the hoop and hit into place with the rubber mallet. The hoop will then be firm in the ground.

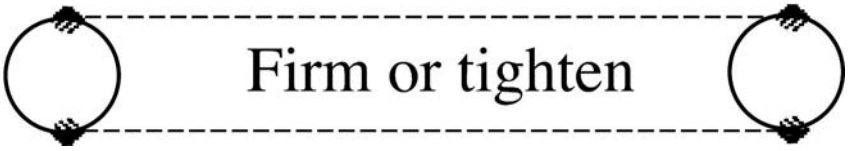

This technique also avoids the build-up of extra compressed material mass in the holes which over time causes the raising of the court around the holes, causing islands or hills.
Never hit hoops on the top centre, over time repeated blows causes the legs to bow, always hit directly over each leg alternatively.

The Carbon Paper Test – for Double Taps

This is a very simple but effective test – some details are available on the Oxford Croquet web site in the technical section at *http://www.oxfordcroquet.com/tech/impact/*.
Essentially it is just a matter of:

1. Taping a sheet of carbon paper just large enough to cover the face of a mallet, carbon outward.
2. Over which, tape a sheet of white paper.
3. Perform the test by striking a ball or balls in whatever shot is chosen.
4. Remove the white paper and one or two marks will be evidence of whether the shot is clean [one mark] or a double tap [two marks].
5. A little experimentation will reveal a great deal about double taps. Smears will prove maintenance of contact [pulls and pushes] but some experimentation is necessary!

Figure 1 Example of a 'double tap' or 'multiple hit' with the balls starting 50 mm apart.
The visual evidence - The *struck* ball travelled 5 metres. The forward (*hit* ball or target ball) travelled 10 metres – indicating that a double tap had occurred.

After the carbon paper was examined it revealed two impressions = double tap.

Figure 2 The carbon paper impact test show smears indicating 'pushing or pulling' *Rule 13(a)(10) - "maintains contact with the striker's ball by pushing or pulling the ball with the mallet"*.

Making a carbon paper test kit:

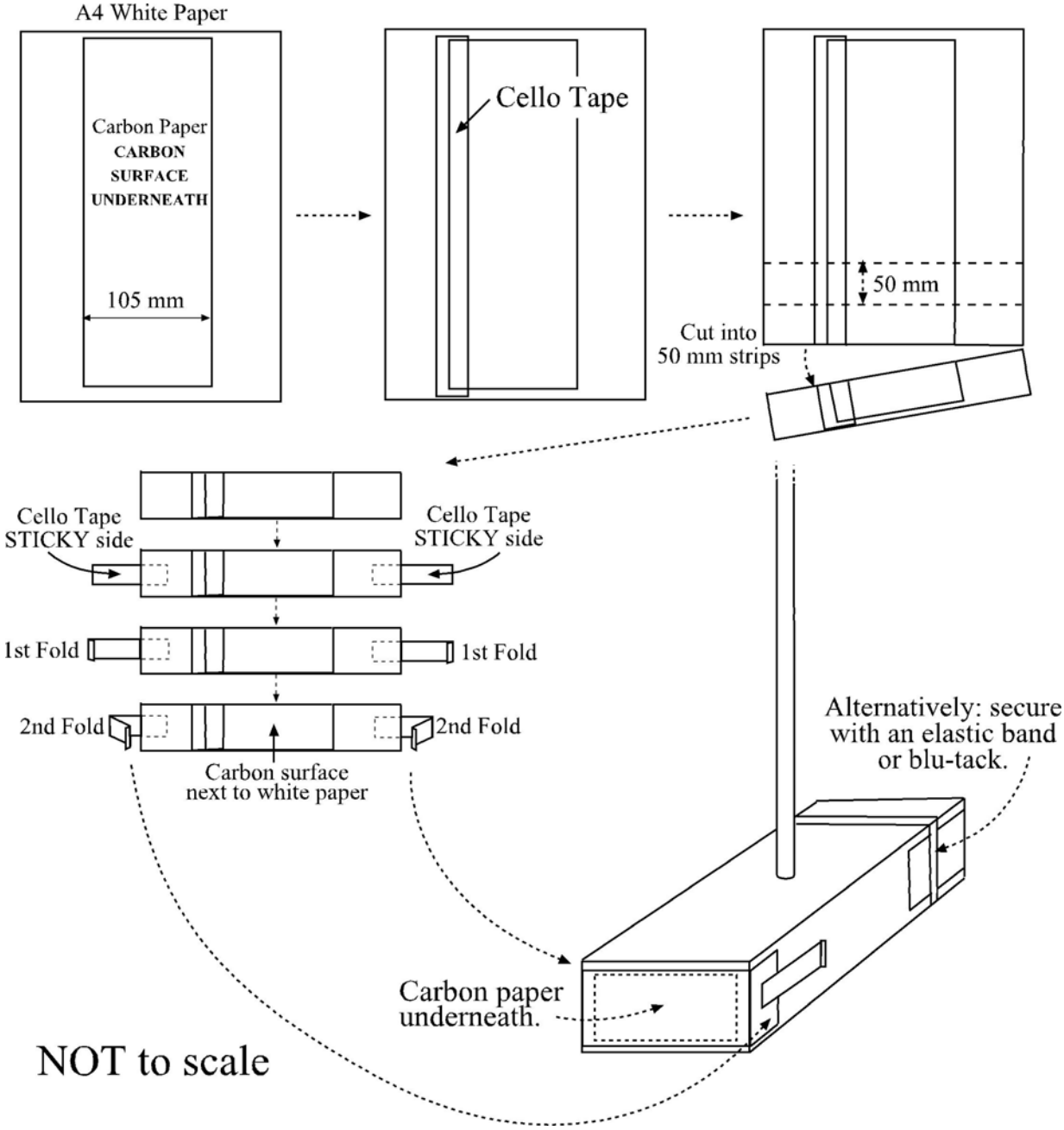

Making a carbon paper test kit:

1 A sheet of A4 size plain white paper.
2 A sheet of A4 carbon paper cut in half vertically 100 x 300 mm (4” x 12”).
3 Centre the carbon paper on the white paper – carbon side towards the paper.
4 Cello tape one side of the carbon paper, the full length, to the white paper.
5 Cut across to make combined strips approximately 50 mm (2 inches) wide.
6 Use cello tape to make a pre-folded attachment at each end, to facilitate quick attachment to the mallet face – see sketch.

Rudi Miller (Kew CC, Melbourne) formed the idea that was directly responsible for the development of this quick and easy method of preparing these strips and the method of attachment of these strips to the mallet face.

Bevel Stroke Fault: Hampered Stroke

The so called "bevel" or "bevelled edge" fault is much discussed, but the word "bevel" only rates a passing reference. The term "bevel edge fault" is a colloquial term used for the fault in the *Rule 13 (a)(5)* which reads: *"… strikes the striker's ball with any part of the mallet other than an end-face, either (i) deliberately or (ii) accidentally in a stroke which requires special care because of the proximity of a hoop or the peg or another ball"*. It is a fault under the Rules to deliberately play a stroke in which the mallet strikes the ball with other than the end-face but it is NOT a fault if the player accidentally does so in the open court.

However if the stroke is hampered by a hoop, peg or another ball and the striker contacts the ball with a part of the mallet other than "end-face", it is a fault.

Scenario 1: The ball has just "staggered through the hoop" and has rolled slightly to one side so that the hoop leg makes the playing of the next stroke difficult. The striker is faced with the decision of how to legally play the hampered stroke.

Scenario 2: The striker ball is about 2 inches in front of hoop 12 but the opponent has jumped over it to level the score at 6 all. The striker has the unenviable task of attempting to strike through the hoop to get a good position behind Hoop 13The referee is to mark the ball (using the ball marking technique described in *Section B3* of the *ACA GC Referees Manual*), and stand in the most appropriate position.

The referee is to stand close - the principle being "stand where you **can** see, not where you **cannot** see", but not so close that there is a safety risk.

Probably the best place to stand is as close as comfortable to the right shoulder (of a RH player). The referee ought to ask the striker how they are going to play the stroke (e.g. a hard or soft stroke) before they make test swings at the ball. The referee ought to locate their eyes at 90 degrees to where the mallet will contact the ball, if the striker intends to swing through (or alongside) the hoop, as illustrated in Figure 1, as a top bevel fault could occur. The referee needs to have their eyes at about 12 to 18 inches (300 to 450 mm) above the ground.

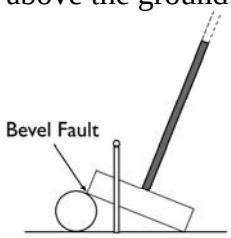

Figure 1

If the striker decides to play the stroke as in Figure 2 where a side bevel fault could occur, the referee is to stand at the striker's right shoulder (assuming a right handed player) looking down to best observe a possible side bevel fault. A side bevel fault will be obvious if the ball travels at a different direction (B) from the swing and intended direction (A). This might be accompanied by a different impact sound to the sound expected when a clean hit occurs. But the referee ought to rely on the direction (direction A compared to direction B) angle of departure as the prime indicator of a bevel fault, as sound is not a good indicator.

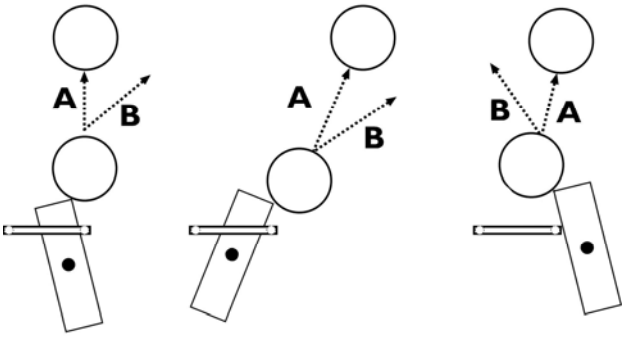

Figure 2

Locate the eye/s at 90 degrees to where the mallet will contact the ball, if the striker intends to swing through (or alongside) the hoop, as illustrated in Figure 3, as a side bevel fault could occur. The referee ought to have their eyes at about 12 to 18 inches (300 to 450 mm) above the ground or a low as possible. This is a situation where a bottom bevel could occur or a 'push' (maintenance of contact) or a 'double tap' can occur.

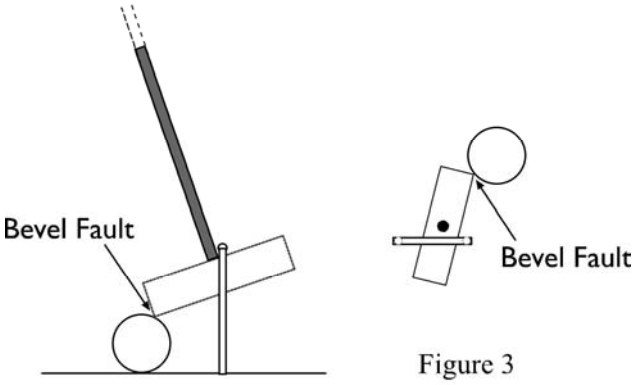

Figure 3

In some cases the referee ought to consider calling a second referee to watch, if a combination of one or the other faults could occur. The prime referee ought to ask the second referee to watch for one specific fault area and the prime referee, the other.
Referees need never be intimidated or fear scorn by calling a second referee to assist, as it is becoming a practice at world class events where calling a fault in these high level games is of such significance.
A second referee may be invited by the prime referee and is to offer confidential advice to the prime referee to assist the prime referee to **make and announce** the decision.

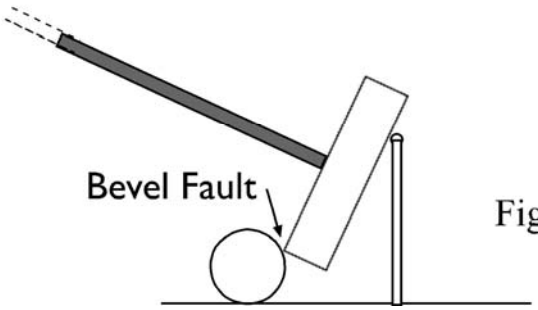

Figure 4

Locate the eyes at 90 degrees to where the mallet will contact the ball, if the striker intends to swing through (or alongside) the hoop, as illustrated in Figure 4 as a top bevel fault could occur. The referee needs to have their eyes at about 12 to 18 inches (300 to 450 mm) above the ground

Referees are to keep in mind that the sometimes practiced action of unscrupulous or arrogant players of calling a referee (a RoC) and then playing the stroke before the referee arrives is not to be tolerated. Calling a referee is "stopping play" If a striker (or opponent), having called a RoC, plays the stroke before the referee arrives, the referee ought to invoke *Rule 14(a)(9)*.

The Halfway Rule (Offside) - Rule 10

The 2007 Rule is little different to the old *Rule 11* except in one aspect: a ball ordered to a Penalty Spot becomes an outside agency - *Rule 10(c)(1).*
The commentary below is written in a different way from the actual rule, but the actual *Rule 10* ought to be read carefully in its entirety.

The Halfway Rule – *Rule 10* (written differently)

1. After a hoop point has been scored, any ball which is resting **beyond** the specific halfway line between the hoop just scored and the next hoop is an **'offside ball'** - unless it is an **'exception'.** This means that it reached its position:
   - 1.1. as a result of the stroke just played; (the ball that ran the hoop - a ball that peeled another ball or a ball that hit a hoop that caused another ball to run the hoop, even without actually hitting that ball)
   - 1.2. as a result of an opponent's stroke; (Bab's blue ball hit the red ball across the halfway line and Ray has not struck the red since **or** the red ball was across the halfway line (and would have become an offside ball) but it was hit by the blue ball that just ran the hoop)
   - 1.3. as a result of contact with an opponent's ball; (the red ball touched the blue ball and crossed the line and has not been struck since)
   - 1.4. as a result of being moved to a penalty spot;

'**beyond**' means ***all of the ball*** *is past the halfway line.*

2. If a ball is across the halfway line and it appears that it might be an exception (Points 1.1 to 1.4 above) it is important to note that if it did originally cross the line in this manner, that the owner has not actually struck it since, as this nullifies its 'exception' status.

3. Before the next stroke is played, the opponent of the owner of an offside ball is entitled to direct that the offside ball is to next be struck either from:
   - 3.1. where it lies or
   - 3.2. from either of the D or E penalty spots, as chosen by the opponent of the owner.

4. If Bab, the owner of an offside ball, plays (either ball) before the opponent (Ray) has given a direction under *10(c)(1)* Ray may stop play and may then order the offside ball to one of the penalty spots or to be replayed (and any balls moved to be replaced).
   Also, Bab possibly suffers a further penalty. If Ray also has an offside ball and Bab is ordered to replay either of their balls as above, Bab then loses the right to implement the offside penalty against Ray's ball.
   But if Bab plays either an offside ball or an onside ball and Ray then strikes one of their balls, Bab's stroke and the position of the offside ball is condoned.

5. However, this placement on the penalty spot may be delayed (for the sake of convenience). But it is an outside agency, *Rule 9(d)* and if hit by a ball *Rule 9(f)* applies (see also *Commentary 9(f)* – which means that it ought to be moved if there is the slightest chance that it could be hit).

6. Referees: The referee is required not to draw attention to an "offside ball" about to be struck (as it is not an error or a fault) nor to draw attention to it after it occurs (the referee is not to call or announce it). The opponent is to discover it or by failing to do so, condones (ignores) this action and play continues.

7. Penalty Spots: There are only two: the ends of the D—E line.

Short comment on Rule 10 - Halfway & Offside

This Rule requires careful reading and the significance of *Rule 10* is **not always fully understood.**
The interpretation of *Rule 10(b)(2)* can be explained thus:
Bab scores the hoop (in order) with Blue.
Ray's red ball is 'onside' but yellow and black are 'offside'.
Ray then 'plays' red. Ray has played red before the offside yellow has been dealt with – Bab has two choices:

1 Bab may accept the position where red has come to rest and play continues,
or
2 Bab may stop play and require Ray to replace red and take the option of dealing with the offside yellow ball (e.g. by requiring it to be sent to a penalty spot).
3 In either case Ray is then required to **replay** the stroke. This might be to Ray's disadvantage if red had gained a really good position.
4 Ray also loses the right to deal with Bab's offside black ball.
or
5 If Bab fails to recognise this and strikes black, that action condones red's position.

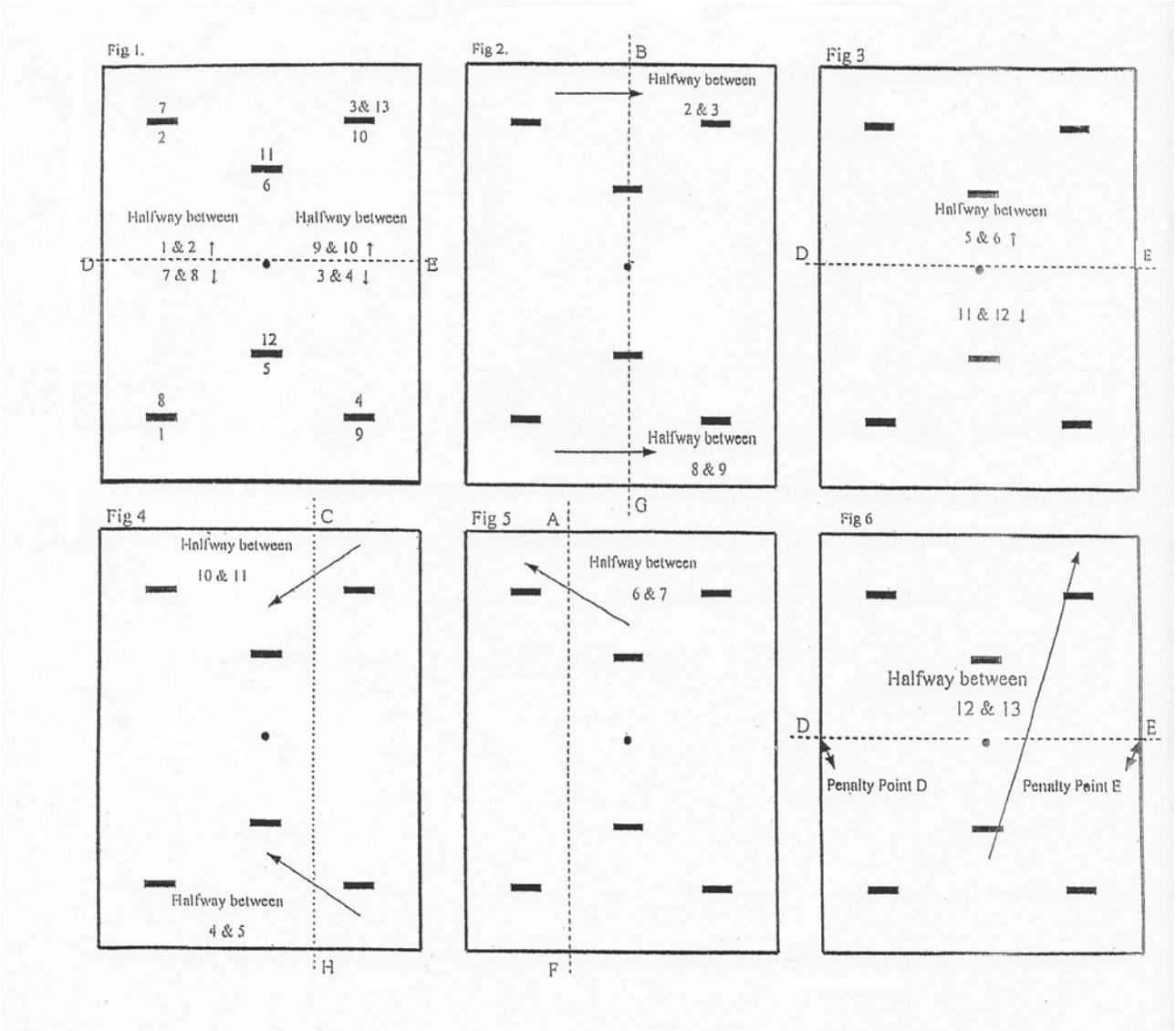

The" Double Tap" – Multiple Contacts by Ball and Mallet

Rule 13 (a) "… It is a fault if, in striking, the striker …" and *Rule 13(a)(6) "double taps the striker's ball by striking it more than once in the same stroke or allows the striker's ball to retouch the mallet*".

The statements below are abridged and edited parts of the *"Official Rulings on the Laws of Association Croquet"* but are relevant here:

> *"… the fault is made if the subsequent contact is with any part of the mallet, not just the end-face.*
>
> *The striker may cause the mallet to hit the striker's ball twice or more if another ball is nearby and a stroke is played along the line joining the centres of the two balls. If the striker follows through, a multiple impact is certain in a shot played firmly if the separation is less than about 2 inches (50 mm) and may occur (depending on the strength of the shot and the degree of follow through) if the separation is two or even three times as great. The likelihood of a multiple impact may be reduced if the striker stops the mallet on impact or plays at an angle to the line of centres, so that the striker's ball rebounds to the side.*
>
> *However, it is correct to deduce that a close scatter shot is a fault if the striker ball moves a significant distance after a near full-on impact with the scattered ball."*
>
> *"… many, if not most strokes involving multiple contacts between mallet and ball are not perceptible to unaided human observers …".*

Unless a referee possesses hearing well above the average, decisions need and can readily be made on the basis of the understanding of "ball mechanics", that is; understanding how balls react to forces, actually simple physics. It is quite easy to judge if a fault has occurred by observing where the striker's ball finishes after the stroke, however this is an observation skill that is worthy of a little practice.

Example: Place two sets of two balls 50 mm apart, have a competent player play a "stun shot" on each pair:

1. Play a "stun shot" and cause the striker's ball to only travel 50 mm or less: this will not be a fault.
2. Play a full stroke with a follow through and cause the striker's ball to travel half as far as the hit ball. This will be a double tap.

Only practice and the use of the carbon paper test (or high speed photography) will convince the skeptic.

If multiple noises occur as a result of the stroke it might be a double tap and the decision is to be made in accordance with the policy adopted by the ACA (see *Section GC E1 Page 1*).

The following pages contain examples of how to judge, by eyesight, if a multiple contact occurs.

Double-tap: Striking the striker ball more than once.

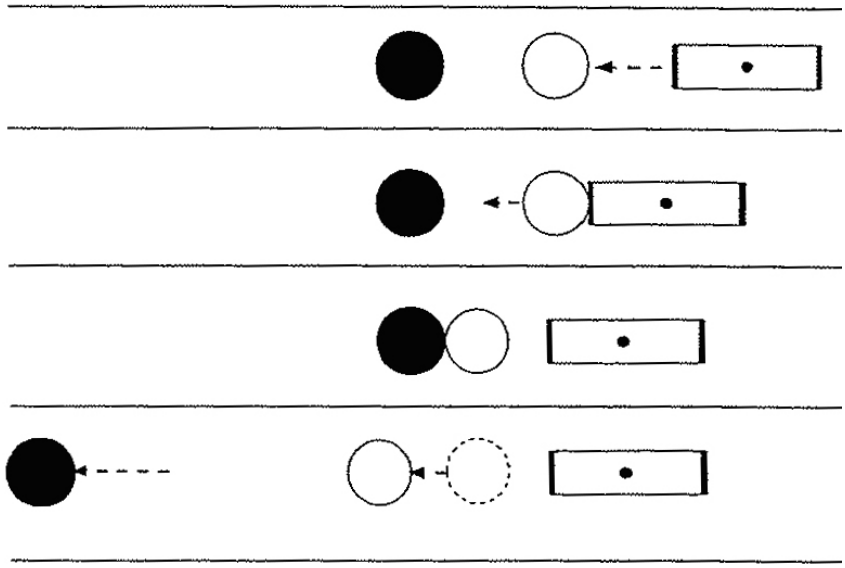

The mallet moves towards the white ball [the striker's ball]

The mallet strikes the white ball

The white ball leaves the mallet face and hits the target [black] ball

The black ball moves a considerable distance and the white ball moves only a short distance – this is a legal stroke

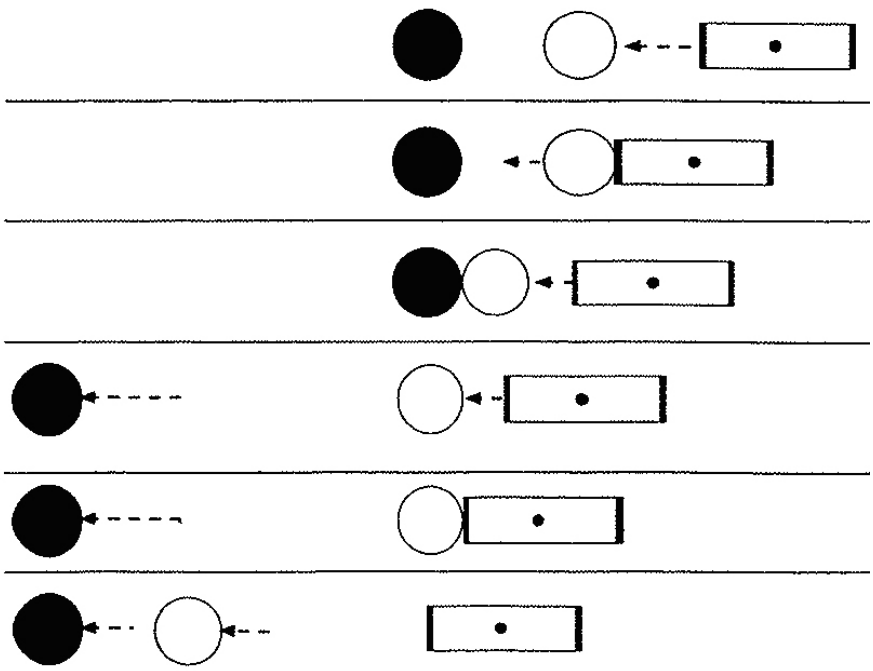

The mallet moves towards the white ball [the striker's ball]

The mallet strikes the white ball

The white ball leaves the mallet face and hits the target [black] ball – the mallet continues to move forward

The black ball moves a considerable distance and the white ball moves only a short distance – the mallet continues to move forward.

The mallet strikes the white ball a second time

The white ball is moved a considerable distance, this is a fault - *Rule 13(a)(6)*

The Visual Double Tap Test

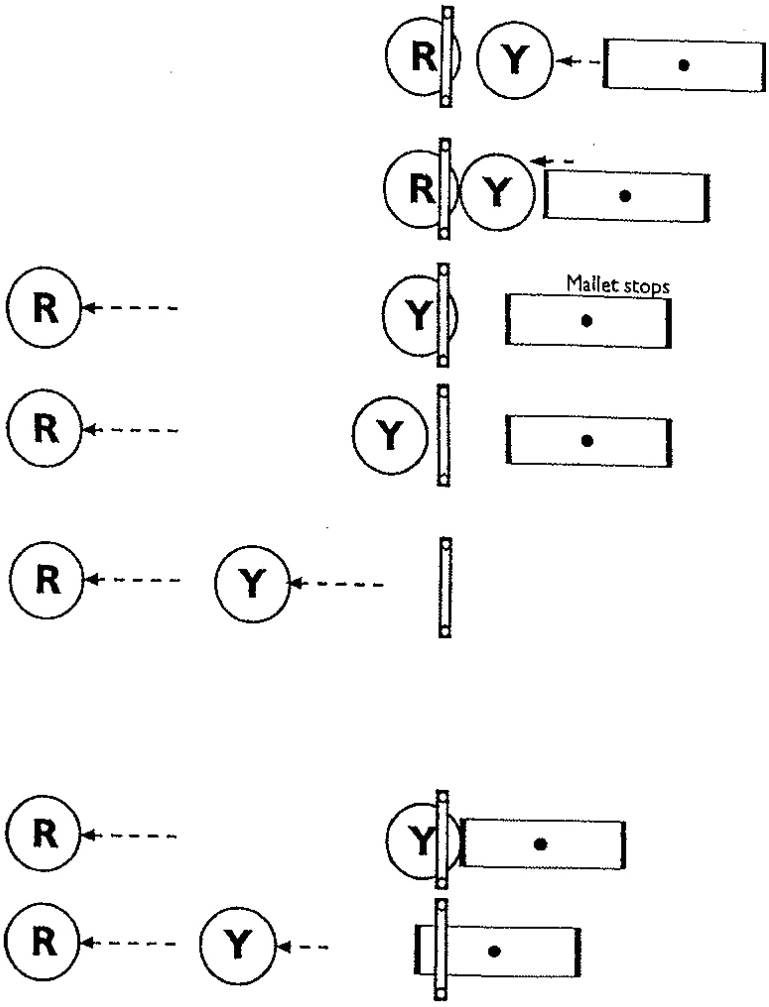

Red is partly through the hoop; yellow is about 25 to 50 mm behind

Mallet strikes yellow which hits red

Yellow finishes in the hoop or yellow finishes just through the hoop

The position of yellow is an indicator of a clean shot

If yellow finishes well past the hoop this is a strong indicator of a double tap

The mallet re-strikes the yellow...

causing extra travel of yellow

Double Taps While Hoop Running

Listening: A double tap in attempted hoop run may be accompanied by multiple noises which have been described as "unclean sounds". Ideally a clean hoop run from an angle should sound something like "click-click" = two sounds. The first "click" being the mallet striking the ball; the second "click" being the ball hitting the upright. If the sound is "click-grrrrungh-click" it may be a double tap. Referees ought to practice learning how to differentiate between clean and unclean sounds.

Example: Have a competent player using a hammer stroke, strike four balls in succession: two clean and two as multiple taps, with the trainees standing close with their eyes closed. After some practice a competent referee will be able to distinguish the difference.
Repeat the exercise by running a hoop, two as clean strokes and two as multiple unclean strokes.

It is ***only*** by experience and practice that the skill of hearing be developed, therefore if a referee is serious about the art and science of refereeing the referee needs to undertake considerable practice in learning to distinguish these sounds, even so, the task is daunting, as hearing is an uneven attribute and skill amongst us all, therefore it is important to remember the passage from the previous section

If a multiple noise occurs as a result of the stroke it might be a double tap. The 'balance of probability' is to apply in accordance with the prevailing ACA policy on *"Decisions"* (see *Section GC E1*).

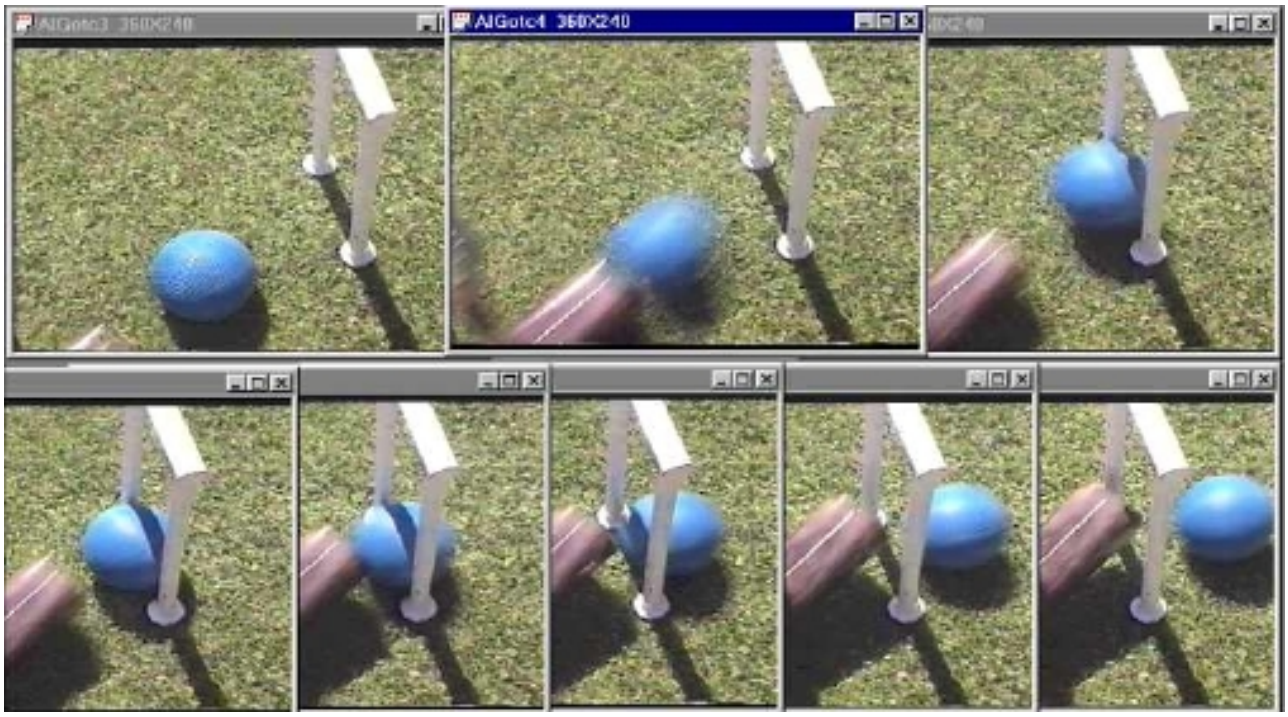

This video sequence of a double tap may be seen in actual motion at:
http://users.oxac.uk/~hanscomb/9notes (produced by Dr J Hanscomb).

Double Taps – Observations & Empirical Evidence

This section deals with double taps other than those caused from straight on shots which are dealt with earlier in this Manual.
Making judgments about double-taps is often a daunting task.

Subjective knowledge: Too often a player or referee has a subjective view of what is a fault or not a fault based on how they intuitively feel about the subject (e.g. double taps). During training sessions, when a player is queried after playing a 'parting shot', which looks like and sounds like a double tap, the reply is often *"but I played away from it"*.
The subjective assumption is that 'the act of playing away' absolves the player from a fault.

Empirical evidence: When such shots are repeated, accumulated evidence may prove otherwise. Repeated testing (using the carbon paper test to assist in gathering evidence) and observation of the movement of balls can provide more positive evidence. Referees need to train themselves to be able to recognize most of the occurrences of a double tap by ball movement alone. There is no need to rely on the sound, as this is unreliable. The double sound cannot be detected in a high percentage of instances.

Double Taps are the bane of referees as there are a large number of inexperienced players.

Every time a striker strikes a striker's ball which hits any other ball which is very close, a double-tap is possible.

Too many double-taps go unnoticed because the player does not realise that they are committing them.
If and when a double-tap is called on a striker, they often cry *"But I hit away!"*. The effect of such "hitting away" is not very well understood.

Referees these days understand the phenomena of making the judgment when the ball is hit in a straight line. The positive evidence of a straight-line double-tap is that the striker ball will travel further than it ought.

Hopefully all referees have attended a training and/or reaccreditation session where this has been demonstrated. The phenomena can be conclusively proven by the carbon paper test.

However, making a judgment about double-taps when "hitting away" is not so scientifically defined – so hereunder is a set of guidelines based on empirical evidence. This system is not foolproof and for it to be effectively implemented for adjudication purposes some thoughtful physical practice in making decisions needs to be undertaken.

The assumption is that if a striker, strikes the striker's ball and striker's ball hits another ball (the target ball) and departs at an angle of less than 45 degrees and the striker ball travels more than about 10 to 20% of the hit ball's travel distance, it will most likely be a fault (see sketch below).

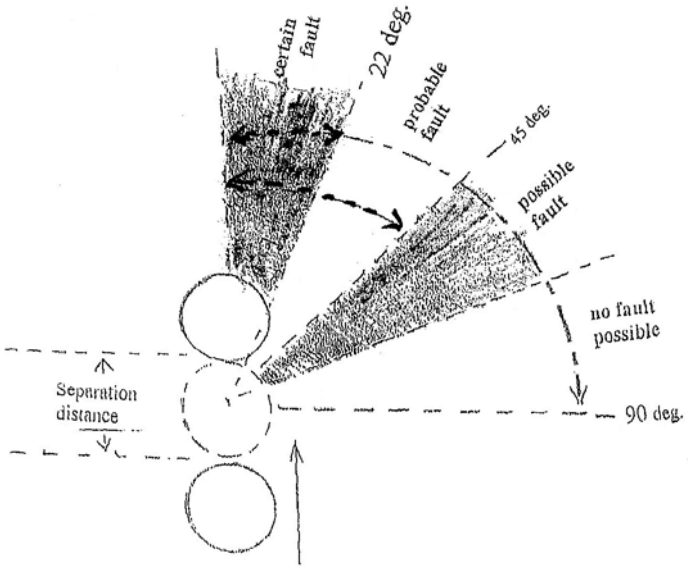

However this is NOT always positive proof as other factors need to be taken into consideration. In many of the examples the carbon paper test will be sufficient proof but experience shows that this test is not completely positive in all cases and the same experiment/s need to be repeated many times in order to equip the referee with sufficient empirical experience to effectively adjudicate.

The factors to be taken into consideration are:

1 The separation distance of balls.
2 The angle of departure of the striker's ball after they hit.
3 The distance the striker's ball travels relative to the hit ball.
4 The way the stroke is played.
5 The angle of the mallet handle to the vertical

Discussion on these points follows.

Factor No 1: The separation distance of balls.
Factor No 2: The angle of departure of the striker's ball after they hit.

The basic assumption is that if a striker's ball, at a distance of say 12 mm (1/2 inch) from the hit ball, departs the hitting position at an angle of less than 45° from straight on, it will be a double tap. As the original distance of the striker's ball and hit ball decrease (from 12 to one mm) the angle of

safe departure will need to increase from 45° to approximately 88°. As the distance of the striker's ball and hit ball increases (from 12 to 100mm) the angle of departure will decrease.

Example A: At a distance of 2 mm from the hit ball, if the striker plays a firm stroke and the striker's ball departs the hitting position at least 2 yards, at an angle of less than 88° from straight on, it will probably be a double tap. In other words; in order for it ***not*** to be a fault:

- It needs to exit the hitting (contacting) position almost at right angles (90°)
- It also means the striker's ball ought to travel at least 20 to 30 times farther than the hit ball as it will just skim the hit ball.

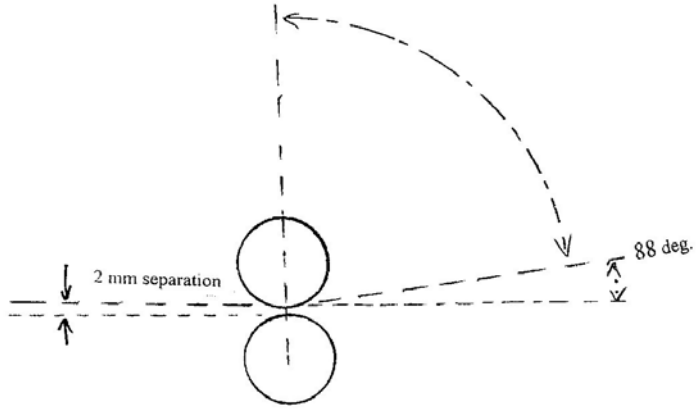

Example B: At a distance of **12** mm (1/2 inch) from the hit ball, if the striker plays a firm stroke and the striker's ball departs the hitting position at least 2 yards, and striker's ball departs the hitting position at an angle of less than 80° from straight on, it will probably be a double tap. In other words; in order for it ***not*** to be a fault:

- It needs to exit the hitting (contacting) position almost at right angles (but not as severe as in Example A).
- It also means the striker's ball ought to travel at least 10 to 20 times farther than the hit ball

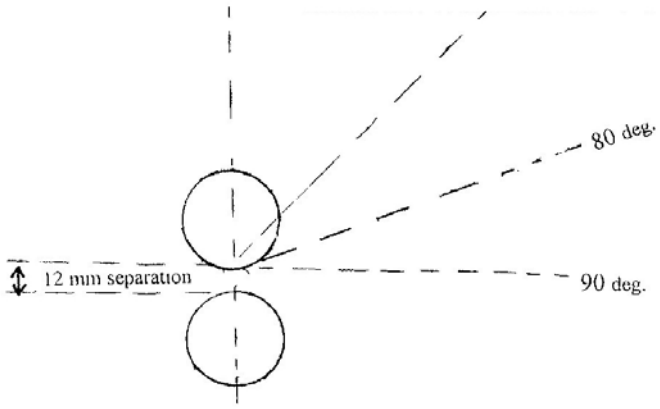

Example C: At a distance of 75 mm (3 inches) from the hit ball, if the if the striker plays a firm stroke and the striker's ball departs the hitting position at least 2 yards, and the striker ball departs the hitting position at an angle of less than 45° from straight on, it will probably be a double tap. In other words; in order for it ***not*** to be a fault:

- It needs to exit the hitting (contacting) position almost along the 45° angle line or greater (towards the 90° line.)
- It also means the striker's ball ought to travel about only 10% of the distance of the hit ball.

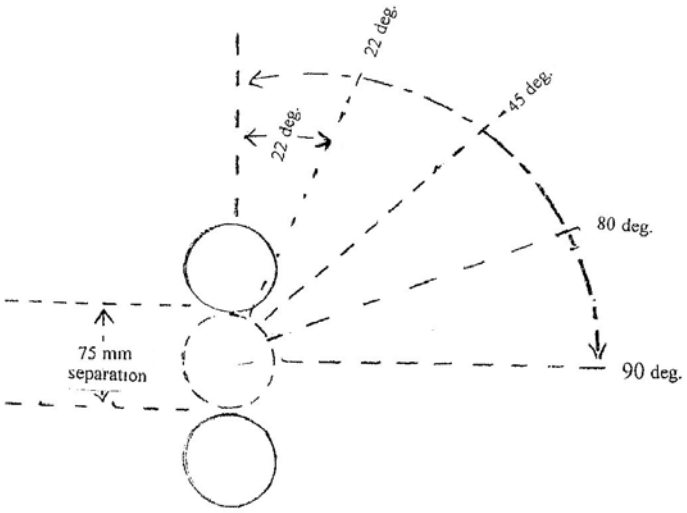

Observation: The direction of departure of the striker's ball.
Considerable further experimentation and experience has been gained since the publication of the original draft in Nov 2005, using the carbon paper test to help confirm the validity of the system. However, this method is imperfect and hopefully in the future slow motion (high speed) photography will provide proof.

As an active referee, lately I have been in the habit of placing markers along the 90°, 45° and 0° angle lines of the departure of the striker's ball, in order to assist in the decision making process. If the referee observes that the striker's ball departs in the triangle made by the 45° and 90° angles, there is some indication that it is probably **not** a fault .If the striker's ball departs in the triangle between 0° and 45° this is an **indication** that it is a fault. The word "indication" is used deliberately and further study and practice relative to the above examples (A, B & C) is needed.

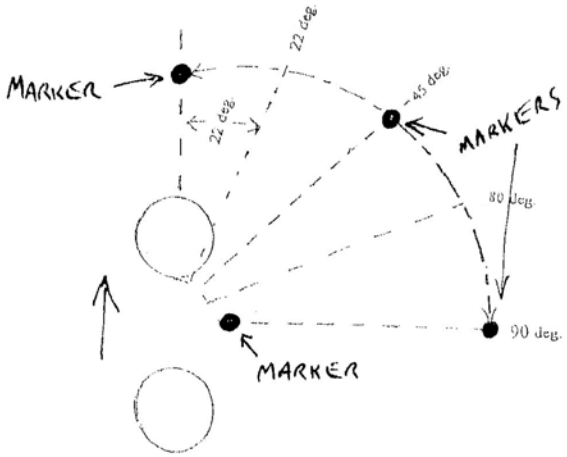

Factor No 3: The distance the striker's ball travels relative to the hit ball.

A further piece of evidence is the distance the striker's ball travels after hitting the hit ball. If the striker's ball travels further then the hit ball this is a good indicator that a double tap has not occurred. If the striker ball travels less than the hit ball this is evidence that a double tap has occurred

Factor No 4: The way the stroke is played.

The effect of the stroke action needs to be taken into consideration when making a judgment. A jab with no follow through will tend to skew the striker more towards the 90° angle compared to a

stroke played with a full follow through. The full follow through will tend to propel the striker's ball more towards the zero to 45° angle of departure.

Factor No 5: The angle of the mallet handle to the vertical.

If the handle is tilted forward the possibility of a double tap is increased. However the striker's ball will have forward spin and will travel further, so the test using distances travelled becomes less useful.

How to make a judgment:

Before the shot occurs ask the striker what type of shot they intend to play
Note the separation distance between the balls.
Calculate (based on the separation distance) the expected safe angle of striker ball departure.
Note what you think is the "safe non DT zone"
Use markers if necessary.
After the stroke
Note the distance the striker ball travelled compared to the hit ball.
Note if the striker played the stroke with a jab, some follow through or a full follow through.
After the stroke is played, call "stop" to give yourself a few moments to replay all the evidence in your mind.
Always remember (if in doubt) apply the current ACA *"Decisions"* policy (Section *GC E1*).
Announce your decision firmly and confidently (don't mumble or whisper) say: "Fault", "OK" or similar; do not ever just walk away. You need to always announce a decision audibly, whatever the occasion, on any refereeing matter.

Cautionary Note: Disclaimer.
Because the player(s) cannot appeal against your decision as a referee you need to remember that the above guidelines are just that; they are guidelines only.

The real need is for referees to practice decision making. Decision making is a skill that is developed from experience, practice and study. As referees, we can and do, study the Laws, Rules, Regulations, manuals and the technical material available to us, but we do not get much opportunity to gain experience. Therefore there is a real need to practice privately. Have a friend play a series of repeated strokes of any type and watch (and hear) the results. Listening is a learned skill; have a friend play a series of double taps at a close run (acute angle) hoop. Listen with your eyes closed and after repeated strokes you might be surprised how much improved is your skill in detecting the different sounds. Decisions about straight-on double-taps on another ball only, can be confidently made by applying the decision making principles illustrated in the Referee's Manual.

The difficult decisions are with potential double-taps where the striker attempts to `hit away', as discussed above. It is in this context that the observation of the reaction of balls, relative to their separation distance (and the other factors discussed above) is where practice is essential.
Also remember 'the balance of probabilities'.

Decisions:
The current ACA policy is to be found in *Section GC E1*.

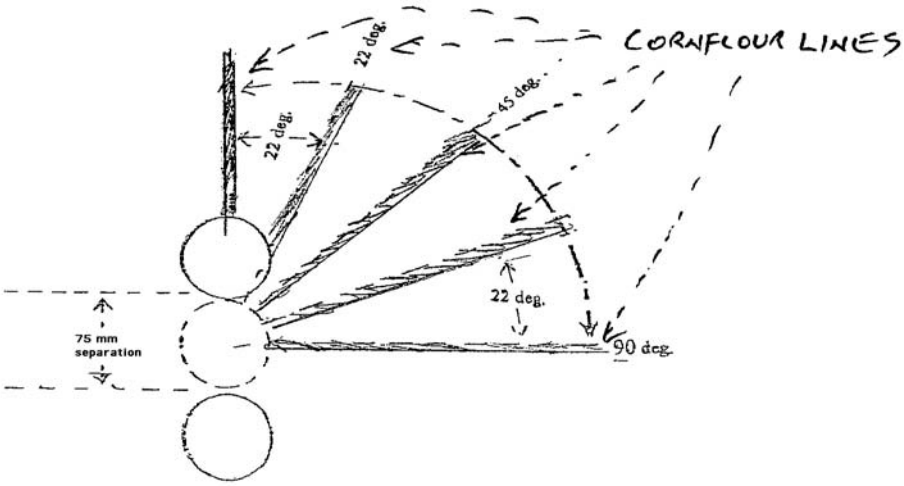

"The Cornflour Test"

This procedure is to familiarise trainees with the technique of making judgments by observation and not to rely on sound, as it is unreliable. The judgment is based on the **angle** and **distance** the striker ball departs from the point of contact after hitting the target (or hit) ball.

Training procedure: Draw a diagram, using cornflour as shown above (Cornflour will wash off and won't be visible after the next watering).

Equipment required: Two Yardsticks and a very large salt shaker (or similar) containing cornflour.

Place the two 'Yard Sticks' on the lawn, (inside or outside the court) parallel and one inch apart.
Sprinkle the Cornflour between the sticks.
Repeat at 90°, in order to create a right angle.
Repeat at 45°, to divide this right-angle into two segments.
Repeat between each so that the right angle is divided into four approximately 22° segments.
Position two balls at the end of the triangle one to three inches apart.
Conduct the carbon paper test.
A striker ball departing in the 0° to 22° triangle will always show a double tap (DT).
A striker balls departing in the 22° to 45° triangle will probably be a DT.
A striker ball departing in the 45° to 67° triangle will possibly be a DT.
A striker ball departing in the 67° to 90° triangle will never be a DT.

This is a training technique and impossible to use during a game but the same 'triangle' can be achieved by placing four markers as shown previously. Four markers are an acceptable number to use especially if the game is critical and a double tap could change the outcome.
When conducting training sessions suggest you allow the participants to try the carbon paper test; they have great fun trying to beat the system. Always prepare at least 6 mallets with carbon paper strips attached, prior to a session starting.

Hoop running – Double Tap

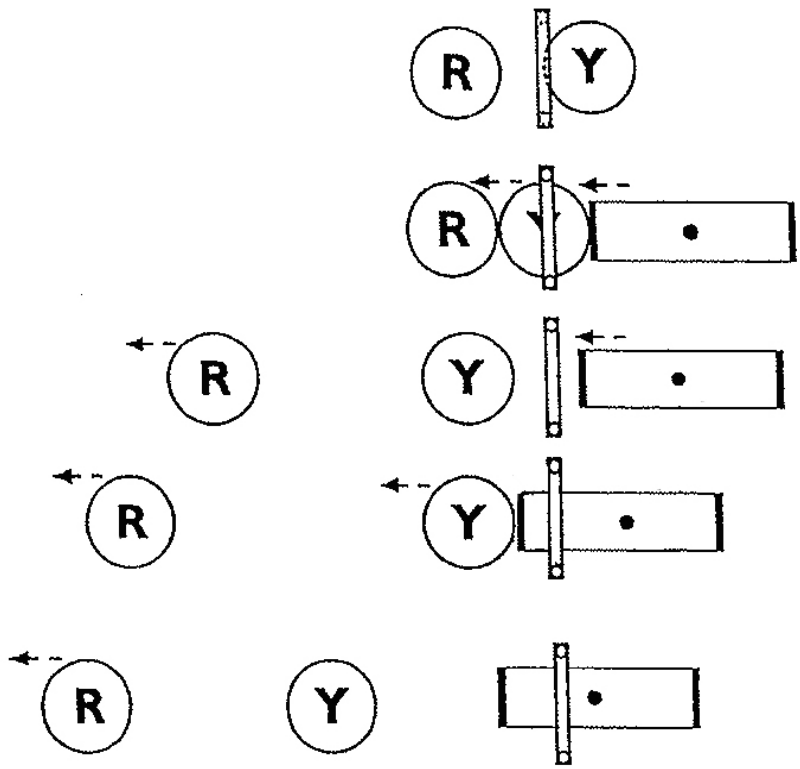

Both balls are stationary. Yellow will attempt to run the hoop.

Yellow is struck by the mallet and proceeds partly through the hoop where it hits red.

Red moves forward. Yellow loses most of its forward motion. The mallet continues forward.

Yellow slowly staggers through the hoop. The mallet hits yellow again. This is a double-tap.

The yellow ball travels further than it would have had a double tap not occurred.

This **is a fault** *Rule 13(a)(6)*.

Hoop running – Push

The term "Push" is commonly used and is a colloquial word for the term *"maintains contact"* - *Rule 13(a)(10)*.

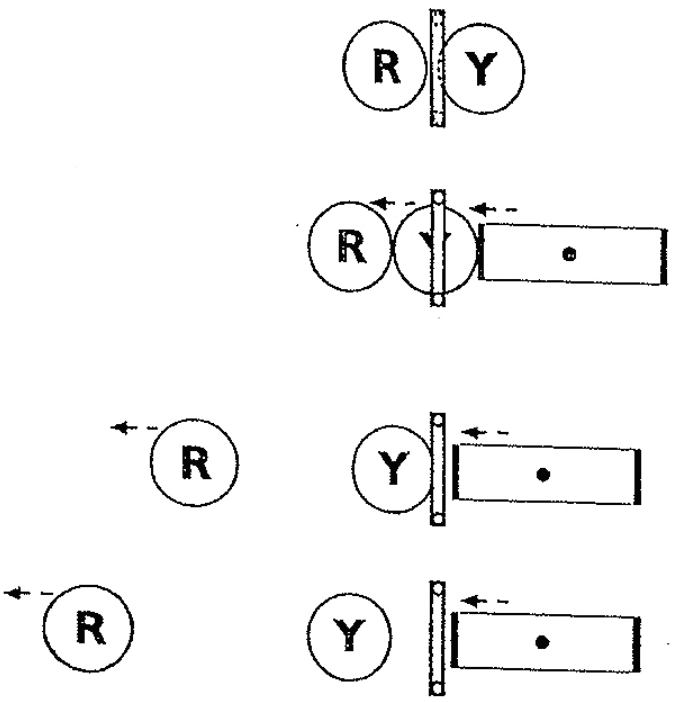

Both balls are stationary and in this example only 2 mm apart, Red is 1 mm 'clear of the hoop, yellow will attempt to run the hoop.

Yellow is struck by the mallet and proceeds partly through the hoop where it hits red. Yellow has maintained contact with the mallet head [a push] because of its initial small distance

Red moves forward. Yellow loses most of its forward motion. The mallet stops.

Yellow slowly staggers through the hoop. The yellow ball has travelled further than it would have had a push not occurred.

This is a **fault -** *Rule 13 (a)(10)* - any separation between balls that are substantially played, other than away, is deemed to be a fault.

The Crush and Double Tap in or Close to a Hoop

The term "crush" is a shorthand or colloquial way of describing *WCF GC Rule 13(a)(7)*.

> "The classic 'crush' stroke is more difficult to commit than many referees seem to believe. Professor Stan Hall demonstrated that a ball remains in contact with a mallet end-face for a very short time. The distance that matters is that between the impact points on (a) the ball's circumference and (b) the circumference of the hoop leg. In practice, unless the striker is so incompetent as to drive the striker ball almost straight at the upright (in which case a double tap will occur after the 'crush' anyway), this means that the nearest point of the ball must be within 2 mm of the upright before there is any real chance of a crush."

When a mallet strikes a ball

(By Prof. Stan Hall NSW 1994)

This condensed chart below is derived from the Oxford Croquet web site:
http://www.oxfordcroquet.com/tech/hall/index.asp.
Contact times for single ball strokes using Dawson Mark II balls with a normal stroke.

The distance the roqueted ball travelled in metres	**Average contact time between balls in milliseconds** (one thousandth of a second)	**Initial velocity of mallet metres/second**	**Travel distance during contact in mm** (ball and mallet in contact)
24 (hard shot)	0.89	7.3	3.7
12	0.94	5.2	3.0
2.7	1.03	2.2	1.6
0.6 (soft shot)	1.32	1.15	1.19

"If the shaft of the mallet was greatly inclined to the vertical (as in a hammer stroke) the contact time was substantially more because the ground prevented the ball from springing away from the mallet"

Summary
Confusion arises due to:
1. The contact time for a **soft** shot is longer, while the actual contact **distance** is shorter.
2. The contact time for a **hard** shot is shorter, while the actual contact distance is **longer.**

(Condensed by O Edwards 2007)

Additional reading
1. *"When a mallet strikes a Ball"* by Prof Stan Hall, ACA Gazette 1994 (Vol.44 No1 Page 12) which is a quick summary of the full article that appears on http://www.oxfordcroquet.com/tech/hall/index.asp.
2. The ACA Golf Croquet Referees Manual (Section GC B9, page 6)
3. The ACA Association Croquet Referees Manual (Section B9 page 4): "Double tap after a Banana (or worm) Cannon".

The diagram on the following page shows possible 'crush' and 'double tap' situations. The ball is touching the right leg of the hoop with the larger portion of it on the playing side, so that any movement of the ball through the hoop except **away** from the leg would be a fault. It can be seen

that if the line of the mallet when striking is from F, G or H, a firm forward swing could be a **double tap** of the ball onto the left leg of the hoop.

Therefore there is a high probability that a **double tap** would occur if the line of aim of the mallet, when striking, is along F, G or H, unless a careful stroke is played. This is often accompanied by the sound of two clicks – The first is when the mallet strikes the ball and the second when the ball hits the leg – if it is a triple or multiple or rumble sound it probably is a double tap fault.

If the aim is along A, B or C, an immediate *crush* occurs.

The only safe aiming area is the narrow band between D and E. This is why a referee ought to be called when *Rules 13(a)(6), (7)* or *(10)* may be broken.

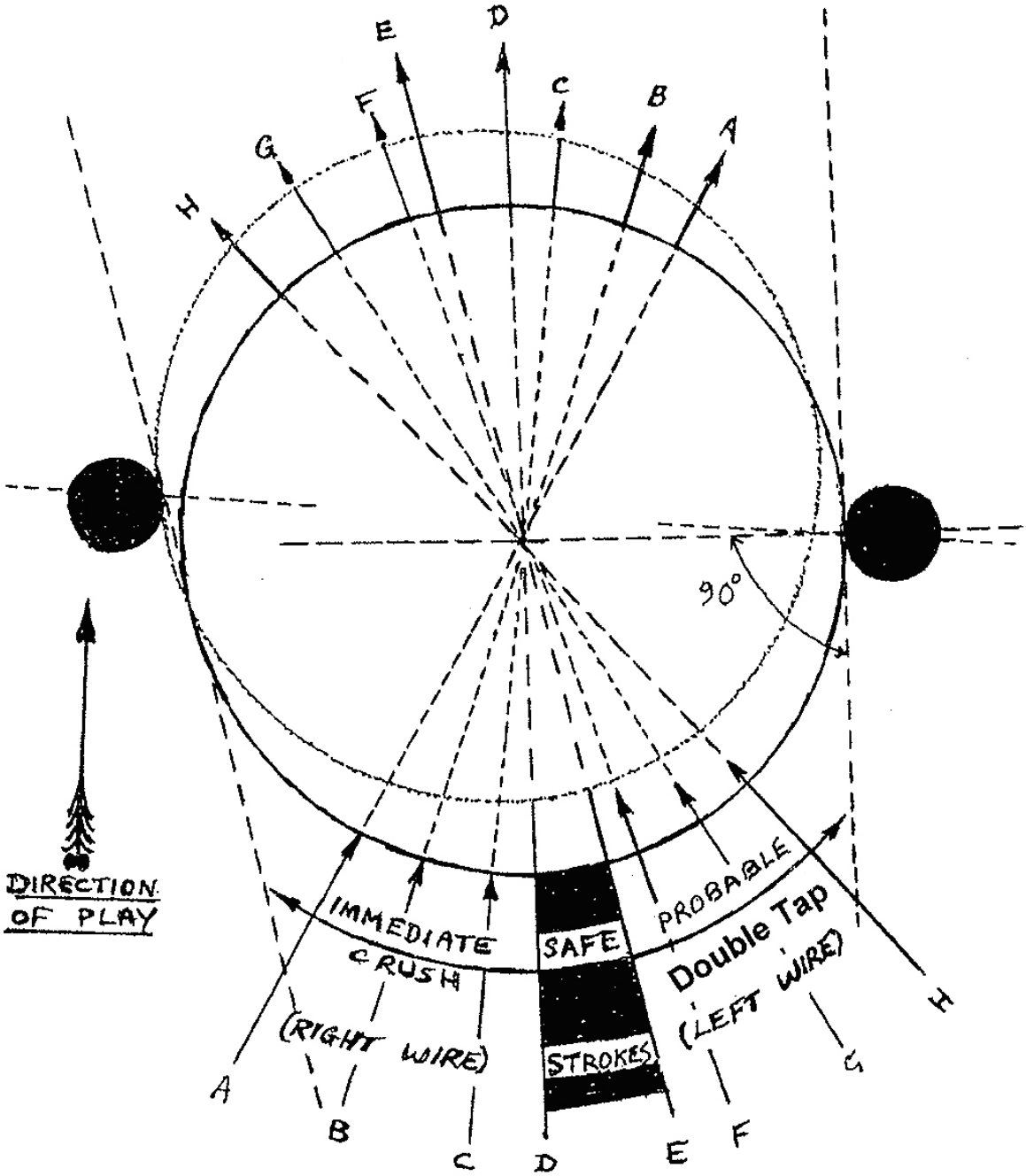

Diagram courtesy VCA

Simplified ACA Statement:
Unless a ball is actually:

- touching a hoop leg, or
- within 2 mm of the hoop leg

then a 'crush' *cannot* occur, however a double-tap might occur.

If a multiple noise occurs as a result of the stroke it probably **will not be a crush** but it probably **will be a double tap fault**.

Basic Courtesy - Golf Croquet Notes for Referees

Guidelines and suggestions of how a referee ought to judge actions of players particularly if there are complaints alleging lack of reasonable and thoughtful behaviour by the opponent.

Players ought to be aware of *Rule 14* (Etiquette) and the intent of the following guidelines (there is also a Players version of this document published). When necessary referees ought to draw players attention to breaches of this Rule and impose penalties where the Rules allow.

A Referee ought to tell the players when necessary:

1 **While a striker is in their stance** (and perhaps casting) that the **non-striker** is to be:

- **Stationary: "**Please keep still, don't swing your mallet and don't move about."
- **Silent**: "Please do not talk to the partner, so loudly that you can be heard by the striker", if the striker can hear general comments it is distracting. . Referees ought to remind players about *Rule 14(b)* the first time an inconsiderate and thoughtless person breaches these simple codes of good and logical behaviour, a gentle warning is usually appropriate and effective the first time.
- **Out of sight (in front of the striker):** That is, sufficiently far enough in front of the striker (say 10 or 11 yards minimum) so that the striker cannot see the non-striker when their head is down addressing the ball.
- **Out of sight (behind the striker)**: so as not to impinge on their **peripheral vision.** The non-striker is to be behind the peripheral vision of the striker (say at 15 degrees behind, in other words in the triangle of 150 degrees behind the striker.

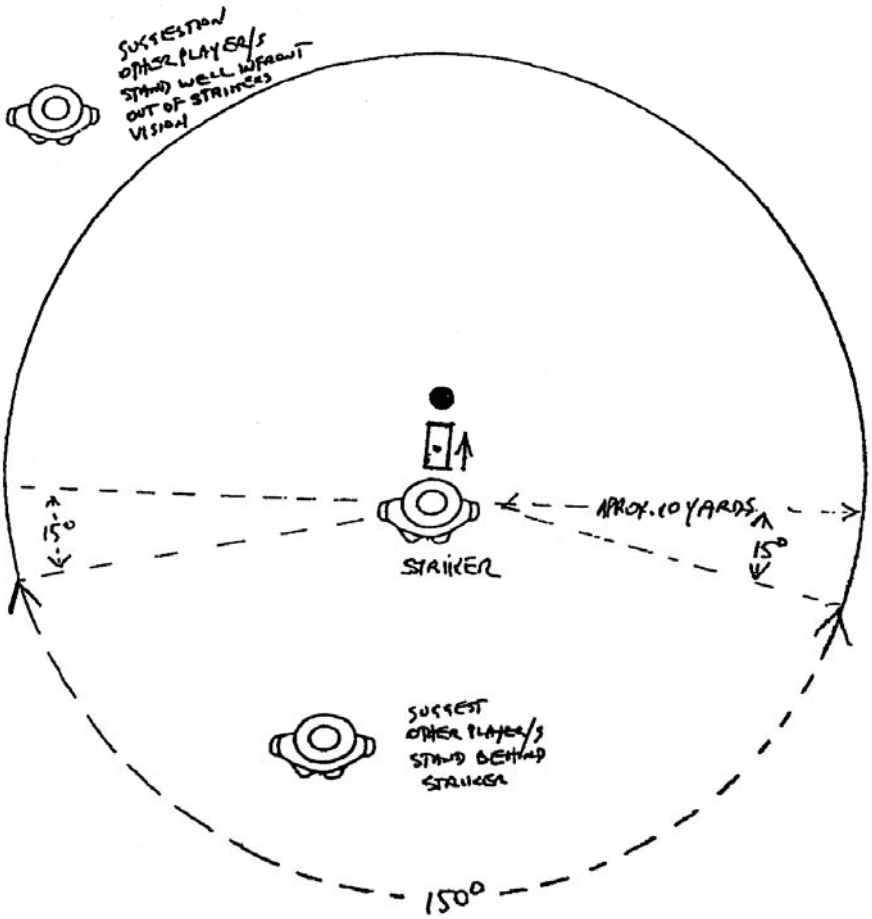

2 **Time wasting (particularly in Doubles): The major problem is thoughtlessness**
Example: If the striker has missed a hit and the ball has travelled some considerable distance, the balls owner **ought** to walk to that distant ball immediately and **not** engage in a lengthy conversation with the partner, (unless there is a critical need to discuss strategy) but be conscious that waiting until their turn is due and only then walking to their distant ball is: thoughtless, time wasting, inconsiderate and boring. The referee may give a gentle warning perhaps?

3 **Don't walk across the line of play:** Sometimes when the striker has missed a shot they need to walk to that ball (maybe to bring it onto the boundary line). They ought not to trudge across the line that the opponent is about to shoot along or over. Sometimes heavy foot prints can leave impressions in a soft court that will alter the path of a soft delicate stroke. A gentle warning perhaps?

4 **Unsolicited Advice:** Some players don't seem to realise what a predicament the adversary (usually when they are about to strike) is placed in, when the opponent (often with the best of intentions) offers unsolicited advice? Can the striker accept it? There is no provision in the 2007 Rules that prevents the striker acting on any unsolicited advice from an opponent or a spectator. Many players may morally be unable to accept advice and play the shot. However the player ought **not** feel obliged to reject advice and so fail to take a course of action not to play a shot that they well might have discovered before playing that shot, otherwise the striker could be precluded from the opportunity of discovering the situation themselves.
Rule 8 specifies that a partner may offer advice to a partner.
Rule 14 (a)(12) forbids the giving of wrong information. *Rule 14 (b)* specifies a warning to apply on the first occasion but the referee ought not hesitate to apply the 'loss of turn' penalty for the second breach.
Rule 14(a)(2) forbids the giving of advice to the opponent. Referees usually (perhaps too often) ignore this breach. If the referee suspects that this is "gamesmanship" *Rule 14 (b)* needs to be applied.
It is better for everybody for good manners and thoughtfulness to prevail.

5 **Double banked games:** Generally, the first game to commence on a court is given the courtesy of right of way. During double banked games players are to carry markers and observe the practice specified in *Rule 1(g):*
"The position of balls from the other game may be marked (and lifted) *with the permission from the participants of that game"*
There may well be occasions where the referee will need to take control and 'mark-down' a slow double banked game that is preventing a faster game progressing.

6 **Stopping the Clock in a time limited game:** When a slow double banked game is preventing a faster game progressing, sometimes players become agitated and constantly stop the clock. The provision to allow or not allow this is usually in the Tournament Conditions or is announced before the event commences.
If the referee is not the time keeper, the referee is to consult the TR who will consult the TM as to how to resolve this situation.

7 **Call the score:**
Refereed games: Immediately a hoop is run, the Referee ought to call the score by first calling the colour of the ball that scored the hoop - *Rule 15(a) (*e.g. 'Red scores, 4 - 1' - this means Red scored the hoop and leads four to one).

8 **Handicaps: Extra Turns**: the number of extra turns available needs to be clearly understood before the game commences particularly in doubles. If the referee has to become involved because the players are confused, this technique helps: It is suggested that each player stand facing their opposite number when allocating the extra turns. Calculate the extra turns to be given by going through the calculation verbally, so there is no

misunderstanding. Pegs or clips ought to be used to indicate the extra turns. These may be attached to the centre peg extension or a suitable stick at courtside. The colour of the pegs or clips can match the colour of the ball of the receiver of extra turns. This technique is excellent for finals as it keeps the audience informed of the state of the game. Alternatively: Players may use clips to be carried by the extra turn receiver and passed as used to the extra turn giver.

9 **Fault - Jump Shot, etc:** When playing an unusual shot (jump shot, hammer shot, cricket/golf across the body shot), after breaking the ground it is not an acceptable form of behaviour to then stand on the divot. The referee or an opponent needs to see the divot to decide if it is a fault (made by the mallet) or not a fault (made by the ball). If a player stands on a suspected divot in a stealthy attempt to disguise this, it is an admission of guilt. The referee is not to hesitate to award a fault.

10 **Calling a Referee (when there is no Referee in Charge):** Players are to signal, in the accepted fashion, by raising the mallet (a gentle reminder is appropriate). If the striker (or the opponent) "stops play" and calls a referee, they are expected to wait until the referee has arrived. If they do not, ask them not to do so again and advise them that they have breached *Rule 14(a)(9).* As the Referee you would be entitled (expected) to replace the ball, mark it and require the shot to be played, (not 'replayed', as a shot cannot be played during the time when play has been stopped). The striker is guilty of bad manners and of boorish behaviour, because; having "stopped play", by calling a referee, all play is to cease until the referee restarts the game by being in position and has had the opportunity to mark the ball.
In extreme cases of truculent players repeatedly 'playing' a ball during the period when 'play has been stopped', instead of proceeding by using *Rule 14* (Etiquette) the referee would be entitled to award a fault under *Rule 14(a)(9).*

11 **Attempted 'Condoning':** If the striker calls a referee to watch a shot (e.g., a close run hoop) and the opponent calls (with the best of intentions) *"Play on, don't bother calling the referee- I trust you etc."* (or similar) - this creates a difficult situation. The referee may be halfway there and be unsure what to do. The striker is to ignore the non-striker as play has been **stopped** by the strikers signal for a referee. The striker is to wait until the referee has come and performed the duty for which they have been called. The discourtesy of the non-striker is unfortunate as they have no authority to make such a suggestion. This is a thoughtless attempt to override the striker's request to stop play no matter how well intended. The referee is to remind the non-striker of the appropriate etiquette.

12 **Shaking Hands:** While it is common practice in Australia to shake hands with the other side before and after a game, don't be alarmed if an overseas visitor fails to do this before a game as it is not necessarily the practice in some overseas countries. Shaking hands between games of a "best-of-3 or -5" ought **not** be done as a handshake signifies the end of a match not end of a game. Shaking the hand of a referee at the end of a match is appropriate.

13 **Self Refereeing by players:** The presence of a referee does not relieve a player from the responsibility of announcing any fault that they commit.
Rule 15: *"The players in all matches are responsible for the fair and correct application of these Rules…".* After the 'Introduction to the Rules' there are '**Notes on the Changes'.** No. 11 reads: *"…is to place the first responsibility on the players."*.
Rule 13(b)(1)**:** *"If the fault is noticed before the opponent has played…"*. In a non-refereed game the striker is only person who will be able, on most occasions, to notice faults. Therefore it is expected that the striker will announce them.
Rule 15: *"The presence or absence of a referee does not change the obligation on a player to follow fair and correct play."*.

14 **Conclusion: The spirit, the intent, the expectation.**
The game of Golf Croquet is intended to be a game that involves prompt interactive play incorporating active refereeing. Most of the changes to the Rules have been to facilitate

play and time wasting rules have either been removed or truncated.
Etiquette is important. The rules require the non-striker to be discrete and to be silent, stationary and unnoticeable to the striker. The expectation is that play will be continuous with almost no time lapse between strokes. Time wasting discussions between strokes is discouraged and is to be penalised under the etiquette rule. It is intended that the game is to be played with a "Referee in Charge" who is an 'active participant', calling the score and keeping spectators informed by signalling when appropriate.

The following section ***B13(b)*** may be photocopied and issued to players.

Basic Courtesy-Golf Croquet Notes for Players

Guidelines and suggestions

How players conduct themselves regarding reasonable behaviour.
Players ought to be aware of *Rule 14* (Etiquette) and the intent of the following guidelines. When necessary referees will draw players' attention to breaches of this Rule and impose penalties where the Rules require. Players' attention is drawn to ***WCF Regulation 6* 'Player's responsibilities'** (this is part of the Rules): *"A player is responsible at all times to act within the letter and spirit of the Rules and Regulations. Failure to do so may render the player liable to disqualification"*
The intent and spirit of Golf Croquet is that it is intended to be played promptly with a minimum of delay between strokes, without time wasting. A significant proportion of the rule changes since the initial WCF GC Rules were released allow for expedition of play. Golf Croquet is a significantly different game to Association Croquet (AC) and any conventions and practices traditional to AC ought to be generally disregarded and the new approach specified in the rules adopted, particularly *Rule 14(a)(8)*: *"Fails to play with reasonable dispatch. Players are not to waste time"*. Prolonged discussions (particularly in doubles) common in AC are not to be tolerated in GC. Players can warn opponents about slow play under *Rule 14(c).*

1 **While a striker is in their stance** (and perhaps casting) the **non-striker** is to be:

- **Stationary: "**Please keep still, don't swing your mallet and don't move about."
- **Silent**: "Please do not talk to your partner so loudly that you can be heard by the striker", if the striker can hear general comments it is distracting. referees ought to remind players about *Rule 14(a)(4)* the first time an inconsiderate and thoughtless person breaches these simple codes of good and logical behaviour, the referee may offer a very gentle warning as this is usually appropriate and effective.
- **Out of sight (behind the striker)** - so as not to impinge on their **peripheral vision.** The non-striker is to be behind the peripheral vision of the striker (say at least 15 degrees behind, in other words in the 150 degree triangle behind the striker. Failure to observe this protocol could find the referee implementing *Rule14(a)(4)* or the striker could apply *Rule 14(c)* against the opponent.
- **Out of sight (in front or at the side of the striker)**: That is; as far as possible away from the striker, within reason (say 10 yards minimum). Sometimes it is inconvenient for the non-striker to go behind the striker as there is insufficient time available if the striker is in a hurry to play the next shot, in this case the non-striker is to be as far away as possible (and stationary) and toward the side. *Rule 14 (a)(5):* The striker is entitled to not have their concentration disturbed by an opponent. The opponent is to be out of sight when the striker's head is down addressing the ball, so they cannot see the non-striker.

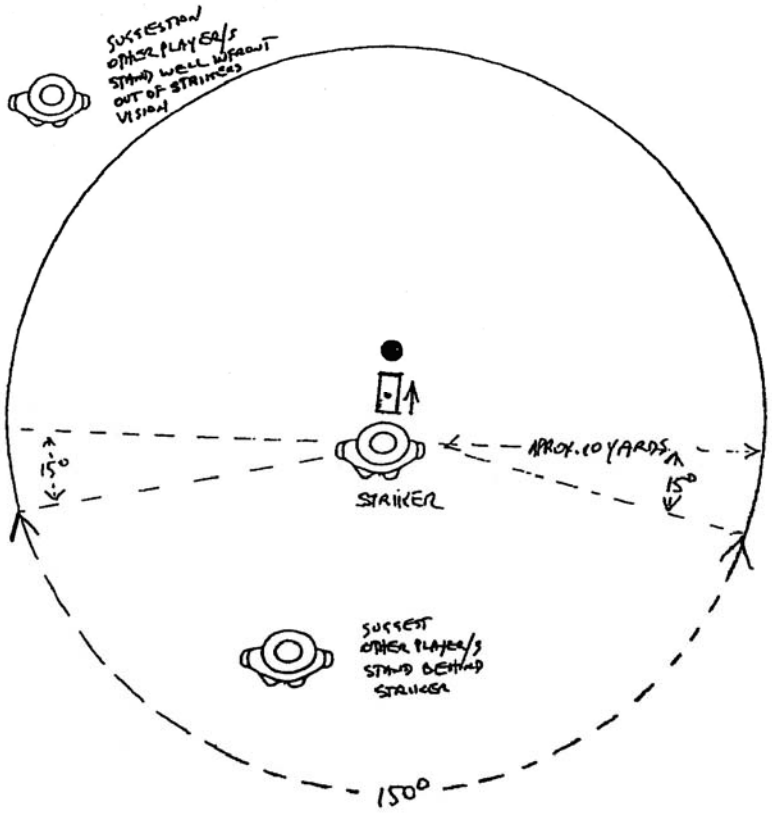

2 **Time wasting (particularly in doubles): The major problem is thoughtlessness.**
Example: If the striker's ball has missed hitting the target ball and the striker's ball has travelled some considerable distance, the balls owner **ought** to walk to that distant ball immediately and **not** engage in a lengthy conversation with the partner. Waiting until their turn is due and only then walking to their distant ball is: thoughtless, time wasting, inconsiderate and boring.
The Referee may give a gentle warning?

3 **Don't walk across the line of play.** Sometimes when the striker has missed a shot, they need to walk to that ball (maybe to bring it onto the boundary line). They ought not trudge across the line that the opponent is about to shoot along or over. Sometimes heavy foot prints can leave impressions in a soft court that will alter the path of a soft delicate stroke.

4 **Unsolicited Advice:** Some players don't seem to realise what a predicament the adversary (usually when they are about to strike) is placed in, when the opponent, (often with the best of intentions) offers unsolicited advice ? Can the striker accept it? There is no provision in the 2007 Rules that prevents the striker acting on any unsolicited advice from an opponent or a spectator.
Many players may feel unable to morally accept advice and play the shot. However the player ought **not** feel obliged to reject advice and so fail to take a course of action not to play a shot that they well might have discovered before playing that shot, otherwise the striker could be precluded from the opportunity of discovering the situation themselves.
Rule 8 specifies that a partner may offer advice to a partner.
Rule 14(a)(12) forbids the giving of wrong information. *Rule 14 (b)* specifies a warning to apply on the first occasion but the referee ought not hesitate to apply the 'loss of turn' penalty for the second breach.
Rule 14(a)(2) forbids the giving of advice to the opponent. Referees usually (perhaps too often) ignore this breach.. If the referee suspects that this is "gamesmanship", *Rule 14 (b)* needs to be applied. It is better for everybody, if good manners and thoughtfulness prevail.

5 **Unsolicited Advice in Teams Matches:** Team matches can be a cause for unintentional breaches. The Captain or another team player might intentionally or unintentionally advise the team (or player) on the court of the state of the other games; e.g. "You need to win at least 7 to 4, otherwise they will win the day (the rubber) on hoops" - this type of situation could cause a major row if it ever occurs. *(Note: the actual legal situation is currently unclear and may be a matter for the event conditions to specify)*

6 **Double banked games**: The first game to commence on a court generally has 'right of way'. There may well be occasions where the referee will need to take control and 'mark-down' a slow double banked game that is preventing a faster game progressing.

7 **Marking Balls**: During double banked games players are to carry plastic markers and observe the practice specified in *Rule 1(g): "The position of balls from the other game may be marked with permission from the participants of that game"*. *D*o **not** use coins as these could damage mower blades if left behind. Players are to obtain permission from the other game before marking and lifting a ball.

8 **Stopping the Clock in a time limited game:** When a slow double banked game is preventing a faster game progressing, players sometimes become agitated and constantly stop the clock. The provision to allow or not allow this is usually in the Tournament Conditions or is announced before the event starts.

9 **Call the score:**

Refereed games: Immediately a hoop is run, the referee ought to call the score by first calling the colour of the ball that scored the hoop, e.g. 'Red scores, 4-1' - this means Red scored the hoop and leads four to one - *Rule 15(a)*.

Self Refereed Games. The side that scored that hoop ought to call the score, e.g. Blue scores the hoop and is then leading 2 to 1, so Bab calls "2-1". If Bab fails to call then Ray ought to call "1-2". Always call the score for yourself first. *Rule 15(a)* "*… the striker or the referee announcing it after each point is scored*".

10 **Handicaps: Extra Turns.** The number of extra turns available needs to be clearly understood before the game commences particularly in doubles. It the referee needs to become involved (before the game starts) because the players are confused this technique helps: each player should stand facing their opposite number when allocating the extra turns. Calculate the extra turns to be given by going through the calculation verbally, so there is no misunderstanding. Pegs or clips ought to be used to indicate the extra turns. These may be attached to the centre peg extension or a suitable stick at courtside or handed from the receiver to the giver. This technique keeps the audience informed of the state of the game.

11 **Fault - Jump Shot, etc.** When playing an unusual shot (jump shot, hammer shot, cricket/golf across the body shot), after breaking the ground it is not an acceptable form of behaviour to then stand on the divot. The referee, or an opponent, needs to see the divot to decide if is a fault (made by the mallet) or not a fault (made by the ball). If a player in a stealthy attempt to disguise a divot, stands on it, this is an admission of guilt. A referee ought not hesitate to award a fault.

12 **Calling a Referee (when there is no Referee in Charge).** Players are expected to signal, in the accepted fashion, by raising the mallet. If the striker (or the opponent) "stops play" and calls a referee, they are expected to wait until the referee has arrived. If a player plays a ball, ask them not to do so again and advise them that they have breached *Rule 14(a)(9)*. The striker is guilty of bad manners, because; having 'stopped play', by calling a referee, all play is to cease until the referee restarts the game by being in position and has had the opportunity to mark the ball. In extreme cases of truculent players repeatedly 'playing' a ball during the period when 'play has been stopped', the referee would be entitled to award a penalty under *Rule 14(a)(9)* and *14(b).*

13 **Attempted 'Condoning'?** If the striker calls a referee to watch a shot (e.g. a close run hoop) and the opponent calls (with the best of intentions) *"Play on, don't bother calling the*

referee- I trust you", or similar, this creates a difficult situation. The referee may be halfway there. The striker is to ignore the non-striker as play has been stopped by the strikers signal for a referee. The striker is to wait until the referee has come and performed the duty for which they have been called. The (possibly unintentional) discourtesy of the non-striker is unfortunate as they have no authority to make such a suggestion. This is a thoughtless attempt to override the strikers request to stop play no matter how well intended. The Referee ought to gently remind the non-striker of the appropriate etiquette.

14 **Offside:** While it is not required by the Rules for a player to declare that they have a 'offside' ball, it is sometimes sensible to do so as the penalty for playing a partner/s striker ball of the side owning an offside ball can be severe and could lead to antagonism. Suggest careful reading of *Rule 10(2)*.

15 **Shaking Hands:** While it is common practice in Australia to shake hands with the other side before and after a game, don't be alarmed if an overseas visitor fails to do this before a game as it is not necessarily the practice is some overseas countries. Shaking hands between games of a "best of 3 or 5" ought not be done as a handshake signifies the end of a match not of a game. Shaking the hand of a referee at the end is appropriate.

16 **Drinks:** The UK have a delightful practice of the winner offering to buy a "drink" for the loser - this usually means alcoholic, as most UK clubs have a bar. If alcohol is not your thing during the day, be discreet how you choose an alternative as refusal of a 'drink' can easily offend.

17 **Self Refereeing:** The presence of a Referee does not relieve a player from the responsibility of admitting any fault that they cause.

Rule 15**:** *"The players in all matches are responsible for the fair and correct application of these Rules."*.

Notes on the changes: No 11: *"…is to place the first responsibility on the players"*

Rule 14(b)(1)**:** *"If the fault is noticed before the opponent has played …"* in a non-refereed game the only person who will be able on most occasions, to notice a fault, is the striker. Therefore it is expected that the striker will admit all faults

Rule 15: *"The presence or absence of a referee does not change the obligation on a player to follow fair and correct play"*

18 **Conclusion: Golf Croquet: The spirit - the intent - the expectation.**

Golf Croquet is intended to be played differently from the way Association Croquet is played. It is a different game, with different intentions, principles and history. Since the Egyptian influenced WCF GC Rules of 1998 were issued, every change to the Rules has been made for a specific reason and in the main it is drifting away in some aspects from the spirit and intent of Association Croquet. The game of Golf Croquet is intended to be a game that involves prompt interactive play incorporating active Refereeing. Most of the changes to the WCF Rules have been to facilitate play and time wasting rules have either been removed or truncated. Etiquette is the major emphasis. The rules require the outplayer to be discrete and to be silent, stationary and unnoticeable to the striker. The expectation is that play will be continuous with almost no time lapse between strokes. Time wasting discussions between strokes is discouraged and is to be penalised under the Etiquette rule. Referees: The intention is that it is to be played with a "Referee in Charge" who is an 'active participant', calling the score and keeping spectators informed by signalling when appropriate.

The following passage is from **Section C3 Page 3** of this Manual

19 **Players as their own Referees** - *Rule 15*

15(a) "The players in all matches are responsible for the fair and correct application of these Rules."

"… if there is a difference of opinion on a matter of fact, the opinion of the player with the best view is to be preferred, but if two views are equal, the strikers opinion prevails" .

Sometimes a player may perceive that the striker is possibly/probably about to commit a fault – what is the appropriate procedure?
One of the basic principles of refereeing it that in order for a decision (any decision) to be made the referee is to be in a position where *"they can see – not where they cannot see"*. If a player suspects that the striker is likely to commit a fault they ought to "stop play" and request that the striker call a referee.
If an independent referee is not available then courtesy requires that the striker call the opponent to referee. If the striker declines then the opponent may insist that the game is delayed until an independent referee is available. Play cannot continue a play has been "stopped". The striker is therefore honour bound to invite the opponent to be the referee for that stroke.
If the ugly situation occurs where the opponent claims a fault on the striker while standing several yards away (**without** having been appointed as above as the referee) such a claim is to be rejected on the following grounds:

1 A decision cannot be made if the opponent is not in a suitable position to make a decision. Being several yards away is a position where they cannot see or hear properly. Referees are not to give credibility on the 'sound' as it is confusing and inaccurate.
2 If they have not formally been invited to be the referee (as above) they have no right to say anything.
3 Claiming faults on the opponent is completely inappropriate, particularly as: *"… if there is a difference of opinion on a matter of fact, the opinion of the player with the best view is to be preferred, but if two views are equal, the strikers opinion prevails"*.
4 If you as a TR are called to adjudicate on an appeal, as above, you are to rule as in point 3.
5 The only possible appeal on any matter such as this is if a referee incorrectly applied the Rules.

Damage - Court Damage

The **Court** Damage fault: *Rules 12(b)* & *13(a)(14).*

1 This includes jump shots, hammer shots or any shot in which the mallet actually damages the grass surface of the court.
2 The damage must have been caused by the mallet and not by the ball.
3 Before damage may be repaired it is to be assessed by the Referee.
4 If the stroke involved breaking the surface of the court and that is: "capable of affecting a subsequent stroke/turn played over the damaged area"; then a fault is imposed.
5 If the previous striker is observed to be repairing the court by pressing the foot into the court in the vicinity of a dubious stroke, in what appears to be an effort to disguise a damage fault, this itself is sufficient evidence to award a fault.
6 Please read the *"Commentary on Rule 12(b)"* which accompanies the Rules.

Commentary:

> *"Rule 12(b) - This now includes damage in an air swing, or any careless use of mallet, feet or other equipment. Damage that breaks or dents the surface, so that a ball rolled gently over the damage may change direction, would be a fault. Damage that scuffs the surface but would not cause a ball to bobble is not a fault, nor is damage outside the boundary of the court. A referee or a player should immediately repair such damage, although the assessment is made before the damage is repaired."*

Special note: *"… nor is damage outside the boundary of the court"*. Damage to the **'lawn'** outside the 'court' is not "damage to the court" and therefore is **not** a fault.

Duration of Games (Time)

Rule 1(c): The basic assumption is that games are to be untimed (time unlimited).
However, when this is not the condition of the event there are other options available to Managers.

Time-limited games

Appointing an independent timekeeper is desirable to avoid conflicts as it is very difficult for a referee to also be the timekeeper. Players in time-limited double-banked games players will often assert their right to the full '60 minutes' by frequently stopping the clock themselves. So it is better for the referee to avoid this task and responsibility, because a referee cannot discharges this function as well as the normal refereeing duties.
Some of the variations are to:

1. stop on the call of time ("stop on the bell"), or
2. stop after one more turn for each ball, or
3. stop after the next hoop is scored, or
4. some other variation, such as playing to a 2 point advantage, depending on the game played, if the first player to four, seven or ten points is not 2 points ahead, play continues for a maximum of six more hoops or until one player has a 2 point advantage (this usually takes much longer than untimed games).

Referees ought to avoid becoming timekeepers particularly for variations 3 & 4 above. Whichever method is to be used it is to be clearly stated in the Tournament Conditions that accompany the entry form or before the game commences. Whichever method of stopping play is used, the management may allow (or require) play to continue, if the scores are tied when play is stopped. Time limited games should **not** normally be used where two games are double-banked on a court.

The TM ought to arrange for an independent person to be the timekeeper or, failing that, one of the players to be responsible for announcing audibly that the time limit has been reached. This avoids any misunderstandings. However it sometimes falls to the referee to perform this function and this is acceptable only if the referee has to control one court only.

How is time kept? The use of the electronic timer is now almost universal, except when the players, as timekeepers, use their personal stopwatch. A wall clock may be on display but it is for general information and nowadays is never the official timer.
Often the players will start the game themselves by activating the timer. If you are acting as a RoC, what should you do at this point? If possible, write down the time the game started and record the order of the first four balls played, and at some point enquire who is the timekeeper – if the players have expected the referee to assume this duty, then take responsibility if you have only one game to control.

Where should the timer be? Where the players can see it if they want to (but see below)

The procedure as time draws to a close. The referee (when acting as a timekeeper) should not obviously look at the timer and certainly not pick it up as this could be an indication to the players that the time limit is approaching. This is almost the same as giving advice. Preferably the referee ought to be able to see the time 'out of the corner of their eye' without looking directly at it.
The referee (when acting as timekeeper) is never to state the time remaining unless asked.

For stop on the bell if the timer rings before the ball is actually struck, then the game is over (unless the scores are tied in which case the management may allow (or require) play to continue for one more hoop in order to produce a winner). **If the timer rings after the ball is actually struck the game is not over until the ball comes to rest and any hoop run (in order) scores the hoop** (if the scores are then tied, the management may allow (or require) play to continue for one more hoop in order to produce a winner)

Replacement of a Ball after Interference (*Rule 9(f)*)

When a ball which is moving (either a struck ball or a hit ball) hits a stationary ball of another game (an outside agency) the actions that follow are to:

- replace the stationary ball (W)
- place the struck ball (B) "where it would otherwise have stopped"

Determining this is sometimes difficult.

Immediate actions (refer to diagram below)**:**

1. Mark the original position of White 1 [W1]
2. Mark the final positions of B2 and W2
3. Return White to W1
4. Measure the distance of W1 to W2 (X distance)
5. Measure the distance of W1 to B2 (Y distance)
6. Determine the direction of Blue 1 [the line of B1 to W1]
7. Position B onto B3, the line that B would have taken (this is W1 + Y)
8. To determine B4, add Z (which is X*2.5) to the line along B1 to W1
   [X multiplied by two and a half times equals Z. Add Z along the line of B1 to B3]

Another way of saying all of this in simple language:

- Put W back where it started. Then place B along the line it would have travelled (the same distance it did travel to reach B2).
- Add two and a half times the distance white travelled after being hit by blue [X times two and a half], along the line blue would have taken"

All this assumes that the referee has been called early enough so the final ball positions can actually be marked and the calculations carried out.

If players disagree and the balls have been moved and the referee is then called to give an "on appeal" adjudication about the final possible resting place of Blue, perhaps the compromise is to place the ball half way between both claims.

A "tongue in the cheek" but nevertheless sound way of saying this, is to place it in a position "of mutual dissatisfaction to both players". While seems a somewhat casual statement – it still is a valid way of saying "place in a compromise position."

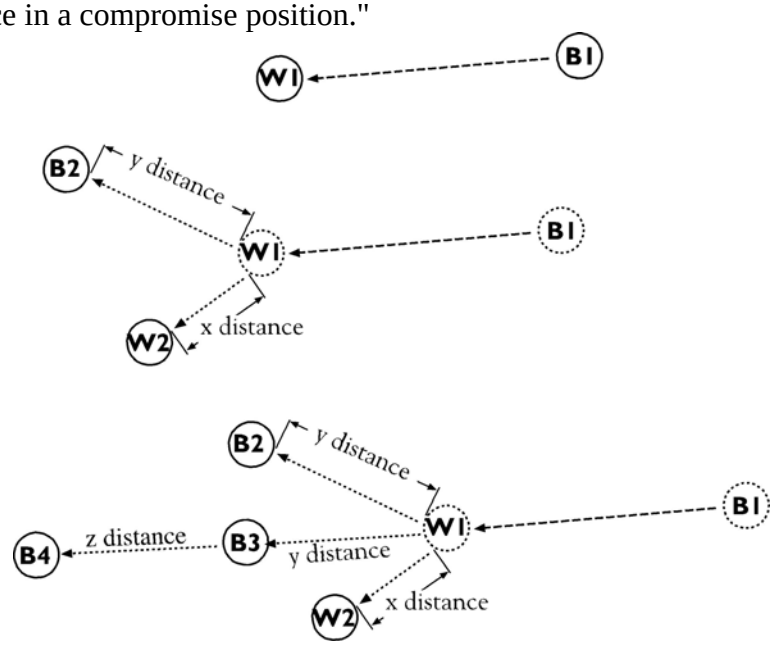

This system was devised by Rudi Miller (Kew CC, Victoria).

Job Descriptions

National Director of Refereeing (NDR)

From the ACA handbook (April 2007)

The National Director of Refereeing shall:

28.5.1. Develop, coordinate, implement and review courses at all levels in accordance with the Australian Refereeing System.

28.5.2. Maintain liaison with State Directors of Refereeing (SDR).

28.5.3. Maintain an up to date register of referees and umpires as supplied by each SDR.

28.5.4. Develop and arrange training activities for referees, and activities for those who may referee at national championships and international events.

28.5.5. Chair the ACA Referee Committee (27.8).

28.5.6. Report to the ACA AGM and on other occasions as required.

28.5.7. In conjunction with each SDR encourage and promote the recruitment of new referees and umpires.

28.5.8. Be the Tournament Referee (TR) at International events held in Australia or appoint same and appoint the TR at all ACA events.

28.5.9. In conjunction with the Refereeing Committee be responsible for:

a) Compiling and distributing question papers for the Australian Referee Examination through State Directors of Refereeing; and

b) Establishing and implementing appropriate quality control procedures covering the examinations.

State Director of Refereeing (SDR) Job Description (Model Only)

This position ought to be appointed by the State Association to carry out the function of the State Refereeing policy and implementing the ACA standard Australia wide Golf Croquet Refereeing system.

FUNCTIONS:

1. Be the chairman of the State Refereeing Committee [SRC].
2. Appoint Examining Referees and conduct (with their assistance) ACA GC Referees exams in appropriate city and country locations.
3. Be a member of the National GC Refereeing panel.
4. Receive monies from the sale of ACA tutorials and other papers and for conducting exams. Forwarding such monies to the State Association Treasurer who will hold it separately from general funds and who will make such monies available to the SDR as required for the expenditure on the advancement of refereeing (for seminars, tutorials, recruitment, travel, etc.).
5. Recognise only referees who have completed accreditation and reaccreditation as required and who are financial members of their State Association.
6. Maintain a list of current GC referees and submit same to the ACA National Director (NDR) twice per year.
7. Prepare and post a newsletter to all registered referees in the state as appropriate.
8. Prepare list(s) of questions and answers (Q&As) in conjunction with the State GC Rules Committee (if one exists) which can be used as required by the state general newsletter. All Q&As are to be approved by the ACA.
9. Send copies of Q&As to the ACA-NDR who will compile them from all states – these will be submitted in bulk to the ACA who will edit for uniformity. The NDR will then forward all Q&As to every State Refereeing Director responsible for GC.
10. Encourage and promote the recruitment of new Referees.
11. Be (or appoint) the Tournament Referee for ACA Events in the state – subject to confirmation by the NDR.
12. Appoint Examining Referees subject to ratification by the State Executive.
13. Hold refresher days for Referees and/or examining referees to cover existing and new Rules, Regulations, and Interpretations.

This is a draft (a model) as each state may need to adopt a slightly different job description depending on State policy.

State Referees Committee (*Model Only)*

This Committee is to **assist** the SDR carry out State Refereeing policy and implementing the ACA standard Australia wide Golf Croquet Refereeing system.

FUNCTIONS:

The function of this (elected or appointed) Committee is to assist the **appointed** State Director of Refereeing.
The SDR will require the Committee to carry out the functions that the SDR assigns to each member and to assist the SDR discharge these duties by:

1. ensuring that all referees are familiar with, and events are refereed in accordance with the Laws of AC, WCF GC Rules and WCF Regulations and ACA Regulations for Tournaments as adopted by *{insert State Name}* or Croquet Australia, depending on the event, and to implement the interpretations (explanations) of the Official Rulings of the ACA AC and GC Laws & Rules Committee as well as arranging refresher days for referees and umpires as directed by the SDR. and implementing programs to attract new referees and umpires.
2. To arrange training sessions for aspiring referees and umpires as required.
3. To arrange for the examining of trainee referees as required.
4. To maintain a list of active state AC croquet referees and umpires and GC referees
5. To appoint Tournament Referees to State events if requested.
6. To maintain a register of croquet umpires and referees who are willing to officiate at State Croquet and Croquet Australia events.
7. To hold meetings at no greater than two-monthly intervals to plan and coordinate its activities, and to discuss matters relating to AC Laws, GC Rules, ACA Regulations, recruiting and refereeing techniques.
8. To assist the SDR investigate complaints made to the Committee about referees and refereeing.
9. To collect attendance fees at Refresher Days and Laws and Rules talks run by the committee, as well as referees' and umpires' examination fees, and monies from the sale of examination papers, and to send all such monies to the treasurer of the state to be used to cover expenses incurred by the Committee.
10. To send information about coming events relevant to the Committee, and other matters of interest, to the editor of the state newsletter for publication.
11. To prepare a written report on the year's activities for the State Annual General Meeting, to be submitted to the Hon. State Secretary as required each year.
12. To prepare a comprehensive budget for the coming year.

***Example*:** The above job description has been adopted by the Croquet Victoria Inc. (CVI) Referees Committee and approved by the CVI SDR. Each state may need to adopt a slightly different job description depending on necessity.

GC Referees - How Appointed & Duties (ACA System)

Tournament Committee

The TM and the TR are appointed by the Committee of Management and both are members of the Tournament Committee (see *ACA Regulation 3* and *ACA handbook 27.2*) – while these are both vaguely written, below is what they seem to actually mean.

The TR and TM are members of the Tournament Committee (TC) and have equal authority within their areas of responsibility. **Note: Appeals Committee: *WCF Regulation 6* specifies the composition of an Appeals Committee (Disputes Committee).**

Refereeing Officials

Other "Refereeing" officials are appointed by the TR under *WCF Regulation 5(c)* not ACA *Regulation 4 (b)(1).*
This WCF Regulation ought to be read carefully as it reads:

> *"The duties of the TR include: prepare and post a list of persons who, during the tournament, may be called to be a Referee in Charge, a Referee on Call, a Referee on Appeal, or who may act as a Spectator Referee."*

This gives the TR the opportunity to delete well intentioned but uninformed and unwanted persons who are qualified referees but are spectators and not officially appointed (and posted) referees of the tournament. The TR is required to prepare a list and post this list (on the venue notice board). The TR can delete the position of SpR and avoid the interference that can be caused by persons who assume that they can act as SpR's, but cannot, unless they are listed on the "Referees Notice".

1. The TR can appoint persons of the following categories:
   Qualified ACA Golf Croquet Referees
   Suitable Persons - obviously great discretion needs to be applied and a Suitable Person ought not to be appointed if qualified Referees are available
2. Such appointees automatically become "Referees" (Referees of the Tournament) for the duration of the tournament and have the powers and duties listed under *WCF Regulation 15* to act as Spectator Referees (SpR) when they are not "in charge" (RiC) or "on-call" (RoC) or "on-appeal"(RoA).
3. These "Referees" are often assigned by the TR, to a specific court or courts and become known as "Referees on Call" (RoC) but in fact their duties are as "Referees" until they are actually called.
4. However, such "Referees" are entitled to act as SpR in the appropriate circumstances under *Rule 15(a)(4).*
5. When a "Referee" is called, they are in the RoC mode but when they actually walk onto the court they become a "Referee in Charge" (RiC) and continue to be a RiC until they quit the court at their discretion under *Rules 15(b)(2)* and *(3).*
6. The exception to this rule is where the TR specifically appoints a "Referee" to be a RiC for one court only.
7. It needs to be noted that qualified referees who are either players or spectators are **not** Spectator Referees for the purpose of this system.

Multiple Venues

The TR appoints a Deputy TR for each venue, who can act as the TR for that venue. However, as mobile phones are now readily available, it is expected that the TR will be consulted if a problem of importance arises.

Players as their own Referees (Rule 15)

> *15(a): "The players in all matches are responsible for the fair and correct application of these Rules.… …In the absence of a referee, if there is a difference of opinion on a matter of fact, the opinion of the player with the best view is to be preferred, but if two views are equal, the strikers opinion prevails"*
>
> *"… if there is a difference of opinion on a matter of fact, the opinion of the player with the best view is to be preferred, but if two views are equal, the strikers opinion prevails".*

Sometimes a player may perceive that the striker is possibly/probably about to commit a fault – what is the appropriate procedure?

One of the basic principles of refereeing it that in order for a decision (any decision) to be made the referee is to be in a position where *"they can see – not where they cannot see (with safety)"*. If a player suspects that the striker is likely to commit a fault they ought to "stop play" and request that the striker call a referee.
If an independent referee is not available then courtesy requires that the striker call the opponent to referee. If the striker declines then the opponent may insist that the game is delayed until an independent referee is available. Play cannot continue if play has been "stopped".
The striker is therefore honour bound to invite the opponent to be the referee for that stroke.

If the ugly situation occurs where the opponent claims a fault on the striker while standing several yards away (**without** having been appointed as the referee as above) such a claim is to be rejected on the following grounds:

1. A decision cannot be made if the opponent is not in a suitable position to make a decision. Being several yards away is a position where they cannot see or hear properly. Referees are to give very little credibility to the 'sound', as it is confusing and inaccurate.
2. If they have not formally been invited to be the referee (as above) they have no right to say anything.
3. Claiming faults on the opponent is completely inappropriate, particularly as:
   "… if there is a difference of opinion on a matter of fact, the opinion of the player with the best view is to be preferred, but if two views are equal, the strikers opinion prevails"
4. If the TR is called to adjudicate on an appeal, as above, the TR is to rule as in point 3. The only possible appeal on any matter such as this is if a referee incorrectly applied the Rules.

The Role of the Tournament Referee

While a great deal has been written about the Rules and a fair amount about refereeing, little has been written about the specific role of the TR. The role of a normal active referee is different to that of a TR.

The first major difference at a major event, is that the TR needs to spend a lot of time watching the work of referees. Also, there is the opportunity for extended discussions about Rules and about refereeing techniques with other referees, which all prove most valuable.

The approach to refereeing is a little different in NZ and a great deal different in the UK and that we need to come to grips with what constitutes " World's Best Practice" which ought to be by adopting the best practices from each country and on this matter there is still a lot of work to be done.

At all levels communication is the most important element.

The 11th version of the TR's Opening Speech has been written – the early versions have been read by TR's and Deputy TR's before most ACA events over the last few years and have been of significant benefit in advising players what is expected of them relative to referees. Such a communication politely addresses and invites questions which prevent misunderstandings occurring and a more pleasant and expeditious tournament occurs.

This "Opening Speech" has caused some players to express surprise about some of their rights, privileges and obligations as there is still a surprisingly high number even top level players whose knowledge of the Rules is so poor that they sometimes forego a right or a privilege by not knowing.

A common misunderstanding is how players may apply the Rules (when a RiC or SuR is not present) and act as their own referees (see Section *GC C2*).

A lesser known function of a TR is to "protect" (as it were) the referee from the machinations of petulant players. Only occasionally, fortunately, a clash of personalities occurs and the TR is called (e.g. the players disagree with the referee's ruling about some decision and create a fuss). The TR should not conduct any of the tests but only determine if the test method used was valid.

The TR must never consider over-ruling the referee's decision on fact, mainly because a decision about "fact" cannot be overruled.

The TR should confidentially suggest to the referee that an alternative method be used to show that "justice is seen to be done". In this situation the TR's function is to fully support and protect the referee from the intimidation of overbearing players. **However, the TR must overrule an apparent 'decision about fact' if the referee has applied the GC Rules incorrectly.**

A subtle function at some later point is to drop a diplomatic hint to an unruly player, particularly, if they happen to be a referee themselves, that unbecoming conduct, as a player, is unacceptable. Such an action must be conducted with great diplomacy as a referee's (or TR's) term of responsibility expires when the game finishes – the game is over when the game is over, *Rule 1 (c)*.
WCF Regulation 5(c) specifies "… prepare and post a list of persons who, during a Tournament **may** be called on …" (see the table below for a model list).
WCF Regulation 5(d) specifies that the TR is to *"… appoint referees to matches"* (a match is best of 1, 3 or 5 games) so when the last game of a match is finished the referee is no longer appointed to that match.

The worst example of poor behavior is of a player, (who themselves are qualified referees), saying: *"You are wrong! I am a referee so I know"*. The TR should gently remind the player who has transgressed in this way, that they bring no glory on themselves, the game or on refereeing in general by this type of behavior.

If unacceptable behavior continues, the application of *Rule 14* is appropriate. The TR is to notify the TM of any such situation as the TM may decide to take action as appropriate under *WCF Regulation 2(q)* or *ACA Regulation 12(d)(9).*

Example Only:

Referees List. **Event Name:** ***ACA Golf Croquet Handicap Singles and Doubles Championships*** **Date:** ***23-26 October 2007*** **Location:** ***Deniliquin Lawn Tennis and Croquet Club*.** The following are appointed as referees (of the event) and may be appointed as Referees in Charge or as Supervising Referees by the TR. They are therefore qualified to act "On Call", "On Appeal" or as "Spectator Referees". Spectators who are accredited Golf Croquet Referees are **not** Spectator Referees. ---------- **Tournament Referee:** ***O Edwards***	
I*nsert Referees names on this list and authorise by the TR signing.*	*TR signature*

Tournament Referee's Opening Address (Version: 11)

Note: The TR is expected to edit this speech appropriately, depending what type or event it is.

Good morning. We are assembled here today to enjoy Golf Croquet.

1. I am *{insert name}*, your TR, and the non playing referees are : *{insert names}*.
   This Tournament is played under the 2007 WCF Golf Croquet Rules and Regulations and the ACA Regulations (where the WCF Regulations do not cover).
   (*Optional announcement*) Those of you who are qualified referees please raise your hands. I now appoint you as Referees of the Tournament. You may now act as Referees-on-Appeal (RoA), Referees-on-Call (RoC) or Spectator Referees (SpR). The reason is: if an officially appointed independent RiC, SuR or RoC is not available, when you are an "outplayer" or resting between game,you can adjudicate, if called. Please note that spectators are **NOT** appointed as Spectator Referees.

2. Players need to remember that they have an obligation of tradition, proper conduct, good manners and protocol. The most significant example of this is stopping play. No player should hesitate to stop play if the player considers that a shot ought to be watched and no striker ought to take offence, it is part of the game, so don't hesitate to call a referee as appropriate.

3. Another example is marking and lifting a ball of another game. It is required under the Rules that you ask permission of the players of the other game **before lifting** the ball as it may be in a critical position even if it is in an open part of the court.

4. Spectators are perhaps the most unappreciated group. For example, they are often left wondering why a referee has not been called to watch what appears to be a hampered stroke.

5. (*For top level events*) Remember you are the "Role Models" and our icons. Your influence on the other (less experienced) players is immense as they follow your examples. Spectators are also favourably impressed by graceful and dignified conduct.

6. Remember too, the elegant, graceful and unmistakable method of calling a referee is to raise the mallet. Strange gesticulations can too easily be mistaken for brushing off a fly or permission to go to the loo.

7. (*If it contains time-limited games*) Players may nominate anyone to be the timekeeper of their game but in the absence of a specifically appointed timekeeper the referee will attempt to discharge this duty, if sufficient referee numbers are available. Otherwise please listen for the timer to ring.

8. The referees are those wearing the yellow jackets. Please see the notice on the notice board as to who are "referees" of this event and in what mode they are operating.

Any questions? If not, I wish you a good Golf Croquet Tournament

Notes and a system for a Refresher Day

List Of Basic Golf Croquet Rule Principles and Exceptions – (a learning system)

1. **A ball is to be stationary before it is struck by a mallet.**
   A ball is not to be played if it moves after it stops. *Rule 6(h)* specifies that *"If a ball moves after its position has been agreed, it is to be returned to the agreed position"*.
   It is a striking fault to play a ball before it stops - *Rule 13(a)(13)*
   It is a non striking fault to touch a ball, moving or not, except as listed in *Rule 12(a)*.

2. **A ball is to be in its correct position before being played (struck) or to be a target ball.**

3. **A ball that is an outside agency should not be struck, played or hit.**
   Exceptions: none.
   If a ball from another game is:
   - hit by a striker's ball (attempted stun shot)
   - played ('struck') by the strikers mallet

   These actions are not part of the game and are disregarded. They are outside agencies under *Rule 9(d)* and therefore are not recognised for the purposes of the game in question. (some people refer to these non existent balls as "mirages" or "hedgehogs").
   If a stationary (purported target) ball from another game is hit in an attempted stun shot, the striker ball is placed where it would otherwise have come to rest, on the principle that the striker ball has passed through the *unrecognised* target ball - *Rule 9(f)*, end of turn.
   If the striker actually plays a ball from another game it is seen as taking a practice swing in thin air, as the ball from the other game is not recognized (*a mirage)*. It is an outside agency - *Rule 9(f)*, the striker is required to play the correct ball.

4. **Correct Position: All balls are always to be in their correct positions, before they are played.**
   Exception: If played from a wrong position which is not discovered until after their position has been condoned in accordance with the principles of *Rule 12(c)(5)* and *13(b)(2)*.

Problem-Solving Basics

How often have you been asked to solve a problem or situation (by letter or phone) and having worked about halfway been confronted with the realisation that you do not have all the information? It happens all too often. Many of the Q&A's in various magazines or posed at rules and/or referees days lack some of the basic information required. Worse still the answer supplied by the enthusiastic recipient is wrong, because they have not been informed of all the facts.

Suggest you detail the following at your next refresher day.

The person who is **making** the enquiry needs to undertake the following:

- Before you ring – make notes. Write an outline of the problem.
- Be sure to fully disclose all the facts.
- Specify what type of a game it is e.g.
  Is it level or handicap?
  What type of competition it is?
  What is the handicap range of the players?
  Is the game is 'time limited' or 'time unlimited'?
  What type of event – Australian Championships or club event etc.?
  Was there a referee assigned to the game by the TR and if so, in what mode was the referee operating? RiC SuR or RoC etc?
- How much time had elapsed?
- Who was the time keeper?
- Was the clock stopped and if so who did it?
- When the actual incident occurred and where was the referee and in what mode?
  What happened next? Was the referee called onto the court and in what capacity e.g. as RoA or RiC?
  Explain the sequence of events, specify who said what (write notes). Also specify any change of mode that the referee assumed or was asked to assume.
  When (if) a ruling was made by the referee, was the Rule or Regulation used disclosed by the referee?
- Where was the TR at that time?
- Was the TR called? At what point?
- If the referee was not called what happened next?
- Was the manager involved and if so why and what transpired?
- What then finally happened?
  Did the person who is reporting this incident write notes and how soon after the event were these notes written?

If by some circumstance you became involved (e.g. as the TR) and had to ‘be an honest broker’ in order to reach a resolution, consider what Rule or Regulation applied and what other Rule or Regulation might be applied as an alternative.

Always remember your function as a referee is: "to ensure that, within the Rules and Regulations of the game, that a fair and equal contest is conducted".

Referees Training – Some Specifications

If a candidate wants to attempt the Referees exam the candidate ought to have the following:

1. Required availability:
   - *WCF Golf Croquet Rules 2007*
   - ACA hoop gauge (Tru Gauge™)
   - 6 markers (plastic golf markers)

Suggestions for consideration and practice:

2. **Ball Marking**: [in a critical position] is to be done by the cross triangulation method using a minimum of 4 markers, using the method in the chart. However, ball marking [in a non-critical position] is at the discretion of the referee.

3. **Shot Watching**: Potential crushes, double taps, pushes, bevel stroke of a 'ball in a hoop' must be watched from a position "where you *can* see" **not** from a position "where you *cannot* see". This means that shots are to be watched from a very close proximity, e.g. just above the action, consistent with your safety and not from many yards away.

4. **Regulations**: Referee appointments and authority levels are subject to *WCF Regulation 5* and *Rule 15*. If not covered in then defer to the current ACA Regulations for Tournaments.

5. Required Reading:
   - *WCF Golf Croquet Rules 2007*, including the *WCF GC Regulations 1-7* and also the *ACA Regulations* to appreciate the Regulations that are not covered in the *WCF GC Regulations*.

6. Suggested Reading:
   - *ACA Golf Croquet Referees Manual*
   - *Commentary* by G Smith (expanded by O Edwards)
   - Q&A's from the ACA

The material in points 5 & 6 above are available from the SDR.
ACA Regulations and hoop gauges are available from the State Secretary

Decisions

In accordance with ACA policy no decision should be made other than on the balance of probabilities. A fault is to be called if the referee thinks it more likely than not that a fault has been committed.

Contamination of evidence

1. If a referee is called to judge whether a ball is in or out of court where a string line is in use and he finds a player standing on the line then a decision should be given in favour of the opponent.
2. If a player breaks the surface of the court with their mallet and stands on the damaged area a fault should be called.

Code Of Ethics – Referees

1. Respect the rights, dignity and worth of every human being regardless of age, gender, ethnic origin, religion or ability.
   - Refrain from any discriminatory practices on the basis of age, gender, ethnic origin, religion or ability.

2. **Be professional** in your appearance and manner and accept responsibility for all actions taken, display high standards in language, manner, punctuality, preparation and presentation. Display control, respect, dignity and professionalism to all involved with croquet [including players, coaches, managers, administrators, the media, parents and spectators] and encourage other referees to demonstrate the same quality. Be courteous, respectful and open to discussion and interaction.

3. Make a commitment to providing quality service to refereeing, your state and the ACA, by seeking continual improvement of your refereeing knowledge and skill through study, performance appraisal and regular updating of competencies.
   Maintain and improve your refereeing accreditation.

4. Operate within the Laws, Rules, Regulations, spirit and intent of croquet.
   Abide by and respect the regulations governing croquet and sport generally and the organisations and individuals administering those regulations.

5. Refrain from any form of personal abuse towards players – this includes verbal, physical and emotional abuse.

6. **Refrain** from any form of sexual harassment**.**
   - This includes explicit, implicit, verbal and non-verbal sexual harassment.

7. Place the safety and welfare of the participants above all else.
   - Ensure that equipment and facilities meet Laws/Rule/Regulation requirements and safety standards. Remember that the laws of the land override the Laws/Rules/Regulations of Croquet.

8. **Be impartial.**

9. **Value** the individual in sport.

10. **Avoid** any situation which may lead to a conflict of interest.

11. **Show concern** and caution towards sick and injured athletes.

12. **Encourage inclusively** and access to all areas of refereeing.

13. Be a **positive role model** for croquet and refereeing.

Etiquette – Referees

The referee's function is to see that *"a fair and equal contest is conducted within the framework of the Rules and Regulations"*. Also take into consideration: *"that it is not enough to adhere to the letter of the law one must embrace it in spirit"* (the quotation was about William Blake's illustrations of the Book of Job).

1. **Be impartial** and appear to be impartial.

2. **Be courteous** and respectful to players and expect to be treated with respect.

3. **Remember you are a referee** and need to observe the principles of refereeing when you are a player (as well as when you are a referee) – be a positive role model in behaviour and appearance.

4. **Never give advice** to a player during a game. If offering advice after the game, preferably do so in the presence of the opponent.

5. **If a player appeals** against a referee's decision on a fact, use an alternative method, if possible, to confirm the original test but reconfirm the decision calmly.

6. **When going onto the court** to watch a shot, avoid walking across the line of aim of the game or any double banked game, as your footprints could affect a soft court.

7. **Avoid** casting your shadow across the shot to be played.

8. **Do not voluntarily** sit or hold lengthy conversations with spectators, but do answer any reasonable number of questions about Rules and Regulations both on and off the court with either side – be open to discussion and interaction at appropriate times.

9. **Do not conduct** loud conversations or move in a way to distract the striker.

10. **Do not run** onto the court but move promptly with dignity.

11. **Do not use** marking techniques that distract the striker.

12. **Use plastic markers** only, do not use coins as they will damage mower blades if left on the court.

13. Aways **stand** where you can see clearly, consistent with safety.

14. **Make players aware** of any known safety concerns about the court, place the safety and welfare of the participants above all else.

15. **When adjudicating** a stroke, never speak or move.

16. Always **give a verbal decision**, never just walk away.